Polo Estate 1998 ➤

Motronic inj. and ignition system (2-valve, roller rocker finger)									
Engine ID	AKK	ANW	AUD						

Edition 12.1999

Protected by copyright. Copying for private or commercial purposes, in part or in whole, is not permitted unless authorised by Volkswagen AG. Volkswagen AG does not guarantee or accept any liability with respect to the correctness of information in this document. Copyright by Volkswagen AG.
satelettronica

List of Workshop Manual Repair GroupsList of Workshop Manual Repair GroupsList of Workshop Manual Repair Groups

Polo Estate 1998 ➤

Motronic inj. and ignition system (2-valve, roller rocker finger)

Repair Group

01 - Self-diagnosis

24 - Mixture preparation, Injection

28 - Ignition system

Protected by copyright. Copying for private or commercial purposes, in part or in whole, is not permitted unless authorised by Volkswagen AG. Volkswagen AG does not guarantee or accept any liability with respect to the correctness of information in this document. Copyright by Volkswagen AG.

satelettronica

Technical information should always be available to the foremen and mechanics, because their careful and constant adherence to the instructions is essential to ensure vehicle road-worthiness and safety. In addition, the normal basic safety precautions for working on motor vehicles must, as a matter of course, be observed.

All rights reserved.
No reproduction without prior agreement from publisher.

Copyright © 2011 Volkswagen AG, Wolfsburg

00056407920

Contents

01 - Self-diagnosis . . . 1

1 General to self-diagnosis . . . 1
1.1 General to self-diagnosis . . . 1
1.2 Features of self-diagnosis . . . 1
1.3 Technical data of self-diagnosis . . . 1
1.4 Significance of EPC warning lamp (fault lamp for electronic accelerator) in dash panel insert . . . 2
1.5 Significance of exhaust emissions warning lamp . . . 3
1.6 Connecting fault reader . . . 4

2 Fault memory . . . 7
2.1 Fault memory . . . 7
2.2 Interrogating and erasing fault memory of engine control unit . . . 7
2.3 Automatic test sequence . . . 8

3 Fault table: SAE P0 codes . . . 9
3.1 Fault table: SAE P0 codes . . . 9

4 Fault table: SAE P1 codes . . . 13
4.1 Fault table: SAE P1 codes . . . 13

5 Final control diagnosis . . . 19
5.1 Final control diagnosis . . . 19
5.2 Performing final control diagnosis . . . 19

6 Readiness code . . . 22
6.1 Readiness code . . . 22
6.2 Function . . . 22
6.3 Reading readiness code . . . 22
6.4 Generating readiness code . . . 23

7 Measured value blocks . . . 29
7.1 Measured value blocks . . . 29
7.2 Safety precautions . . . 29
7.3 Read measured value block . . . 29

8 Evaluating measured value blocks, display groups 0...9 -Basic functions- . . . 31
8.1 Evaluating measured value blocks, display groups 0...9 -Basic functions- . . . 31

9 Evaluating measured value blocks, display groups 10...29 -Ignition- . . . 34
9.1 Evaluating measured value blocks, display groups 10...29 -Ignition- . . . 34

10 Evaluating measured value blocks, display grps 30...49, 99 -Lambda regulation- . . . 38
10.1 Evaluating measured value blocks, display grps 30...49, 99 -Lambda regulation- . . . 38

11 Evaluating measured value blocks, display groups 50...69 -Speed regulation- . . . 43
11.1 Evaluating measured value blocks, display groups 50...69 -Speed regulation- . . . 43

12 Evaluating measured value blocks, display groups 70...79 -Reducing emissions- . . . 46
12.1 Evaluating measured value blocks, display groups 70...79 -Reducing emissions- . . . 46

13 Evaluating measured value blocks, display group 100 -Readiness code- . . . 47
13.1 Evaluating measured value blocks, display group 100 -Readiness code- . . . 47

24 - Mixture preparation, Injection . . . 48

1 Servicing injection system . . . 48
1.1 Servicing injection system . . . 48
1.2 Fitting locations overview . . . 48
1.3 General notes on injection . . . 52
1.4 Removing and installing parts of the injection system . . . 53
1.5 Dismantling and assembling intake manifold . . . 62
1.6 Dismantling and assembling fuel rail with injectors . . . 65
1.7 Dismantling and assembling air cleaner . . . 68
1.8 Safety precautions . . . 72

Volkswagen AG does not guarantee or accept any liability with respect to the correctness of information in this document. Copyright by Volkswagen AG. Protected by copyright. Copying for private or commercial purposes, in part or in whole, is not permitted unless authorised by Volkswagen AG.
satelettronica

1.9 Rules for cleanliness . . . 73
1.10 Technical data . . . 73

2 Checking components . . . 74
2.1 Checking components . . . 74
2.2 Checking Lambda probe heating before catalyst . . . 74
2.3 Checking Lambda probe heating after catalyst . . . 78
2.4 Checking throttle valve control part . . . 81
2.5 Checking intake manifold pressure sender . . . 84
2.6 Checking intake air temperature sender . . . 86
2.7 Checking coolant temperature sender . . . 90
2.8 Checking engine speed sender . . . 94
2.9 Checking injectors . . . 96
2.10 Checking fuel pressure regulator and holding pressure . . . 102
2.11 Checking intake air system for leaks (unmetered air) . . . 106
2.12 Checking intake air preheating . . . 107
2.13 Checking vacuum valve . . . 107

3 Checking functions . . . 109
3.1 Checking functions . . . 109
3.2 Idling check . . . 109
3.3 Checking Lambda probe and Lambda regulation before catalyst . . . 111
3.4 Checking Lambda probe and Lambda regulation after catalyst . . . 116
3.5 Checking ageing of Lambda probe before catalyst . . . 120
3.6 Checking engine operating mode . . . 121

4 Engine control unit . . . 123
4.1 Engine control unit . . . 123
4.2 Checking control unit voltage supply . . . 123
4.3 Procedure after voltage supply open circuit . . . 125
4.4 Replacing engine control unit . . . 125
4.5 Coding engine control unit . . . 126
4.6 Adapting engine control unit to throttle valve control part . . . 127
4.7 Adapting engine control unit to electronic immobilizer . . . 129

5 Checking additional signals . . . 130
5.1 Checking additional signals . . . 130
5.2 Checking speed signal . . . 130
5.3 Checking signal from/to air conditioning system . . . 132
5.4 Checking signal from brake light switch and brake pedal switch . . . 133
5.5 Checking rpm signal . . . 135
5.6 Checking matching resistor of data bus . . . 136

28 - Ignition system . . . 138

1 Servicing ignition system . . . 138
1.1 Servicing ignition system . . . 138
1.2 General notes on ignition system . . . 138
1.3 Removing and installing parts of the ignition system . . . 139
1.4 Safety precautions . . . 142
1.5 Test data, spark plugs . . . 142
1.6 Checking Hall sender . . . 143
1.7 Checking ignition transformer . . . 144
1.8 Checking knock sensor . . . 148
1.9 Check misfiring recognition . . . 150

Copyright by Volkswagen AG. Protected by copyright. Copyright by Volkswagen AG: Volkswagen AG does not guarantee or accept any liability with respect to the correctness of information in this document. Copying in whole or in part is prohibited unless authorised by Volkswagen AG.
satelettronica

01 - Self-diagnosis

1 - General to self-diagnosis

1.1 - General to self-diagnosis

1.2 - Features of self-diagnosis

The engine control unit (Motronic control unit J220) is equipped with a fault memory.

If faults occur in the sensors and components being monitored, they will be stored in the fault memory together with an indication of the type of fault.

After evaluating the information, the engine control unit decides among different faults => Fault table page 13 and stores these until the contents of the fault memory is erased.

Faults which only occur sporadically will have the addendum "sporadic fault" on the print out. These faults will be indicated on the display by the addendum "/SP". The cause of sporadic faults can be e.g. a loose contact or a brief open circuit. If a sporadic fault does not occur again within 40 warm-up phases (engine start below 50° C coolant temperature - switched off above 72° C), it will be erased from the fault memory.

The faults stored can be read-out with the fault reader V.A.G 1551, the vehicle system tester V.A.G 1552 or the new tester VAS 5051 => Page 7 .

The fault memory must be erased after the faults have been rectified => Page 7 .

All values learnt by the engine control unit will be erased when the engine control unit connector is pulled off or the battery is disconnected. However the contents of the fault memory are retained. When the engine is subsequently started the idling could be rough for a brief period. In this case leave the engine running for a few minutes at idling speed or perform a longer test drive, until the learning process is completed.
Procedure after voltage supply open circuit =>Page 125 .

Note:

General information for self-diagnosis can be found in the instruction manuals for the fault reader V.A.G 1551, vehicle system tester V.A.G 1552 or the new tester VAS 5051.

1.3 - Technical data of self-diagnosis

Control unit identification

The faults stored can be read-out with the fault reader V.A.G 1551, the vehicle system tester V.A.G 1552 or the new tester VAS 5051 => Page 7 .

Equipment

Engine code	AKK	ANW	AUD
System designation	Motronic ME7.5.10	Motronic ME7.5.10	Motronic ME7.5.10
Exhaust emissions fulfil	MVEG II standard	D4 standard	EU4 standard
EPC system	yes	yes	yes
Self-diagnosis	yes	yes	yes

satelettronica
Protected by copyright: Copying for private or commercial purposes, in part or in whole, is not permitted unless authorised by Volkswagen AG. Volkswagen AG does not guarantee or accept any liability with respect to the correctness of information in this document. Copyright by Volkswagen AG.

Final control diagnosis	yes	yes	yes
Operating mode of data transfer to V.A.G 1551/1552	Rapid data transfer	Rapid data transfer	Rapid data transfer
Fault memory	Non-volatile memory1)	Non-volatile memory1)	Non-volatile memory1)
Memory for learnt values	Volatile memory2)	Volatile memory2)	Volatile memory2)
Lambda regulation	1 probes	2 probes	2 probes
Knock control	1 knock sensor	1 knock sensor	1 knock sensor

1) Independent of voltage supply.

2) Values are erased when voltage supply is interrupted.

Functions which can be selected when using the fault readers V.A.G 1551/1552 or VAS 5051

The prerequisites to select the desired functions can be found in the following table.

Function		Prerequisite		
Functions on V.A.G 1551/1552 or on VAS 5051		Engine stationary, ignition switched on	Engine running at idling speed	Vehicle being driven
01	Interrogate control unit version	yes	yes	yes
02	Interrogate fault memory	yes1)	yes	yes
03	Final control diagnosis	yes	no	no
04	Basic setting2)	yes	yes	yes
05	Erase fault memory	yes	yes	yes
06	End output	yes	yes	yes
07	Code control unit	no	no	no
08	Read measured value block	yes	yes	yes
10	Adaption	no	no	no
15	Read readiness code3)	yes	yes	yes

1) Only carry out with ignition switched on, when engine does not start (operate starter for at least 6 seconds first).

2) Must be carried out after the following: Replacing engine control unit, throttle valve control part, engine or disconnecting battery.

3) Only engine codes ANW, AUD

1.4 - Significance of EPC warning lamp (fault lamp for electronic accelerator) in dash panel insert

"EPC" is the abbreviation for Electronic Power Control.

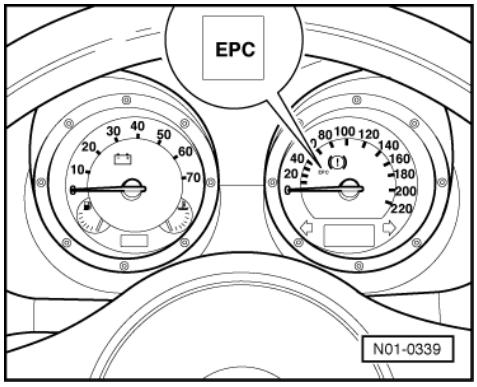

Protected by copyright. Copying for private or commercial purposes, in part or in whole, is not permitted unless authorised by Volkswagen AG. Volkswagen AG does not guarantee or accept any liability with respect to the correctness of information in this document. Copyright by Volkswagen AG.
satelettronica

-> Location of EPC warning lamp

If faults are recognised in electronic power control system when the engine is running, the combi-instrument will switch on the EPC lamp. (These faults are identified in the fault table.) Simultaneously an entry is made in the engine control unit fault memory.

Functional check:

- Switch on ignition:
  the EPC warning lamp must light-up.

If the EPC warning lamp does not light-up with ignition switched on:

- Check combi-instrument and EPC warning lamp as follows:

=> Electrical system self-diagnosis; Repair group 01

If the EPC warning lamp lights up with ignition switched on:

- Start engine and run at idling speed:
  The EPC warning lamp must go out after
  a few seconds.

If the EPC warning lamp does not go out:

- Interrogate fault memory, if necessary, repair any faults and then erase fault memory => Page 7 , interrogating and erasing fault memory.

1.5 - Significance of exhaust emissions warning lamp

Engine code: AUD

If the engine control unit detects a fault this is indicated by switching the exhaust emissions warning lamp on.

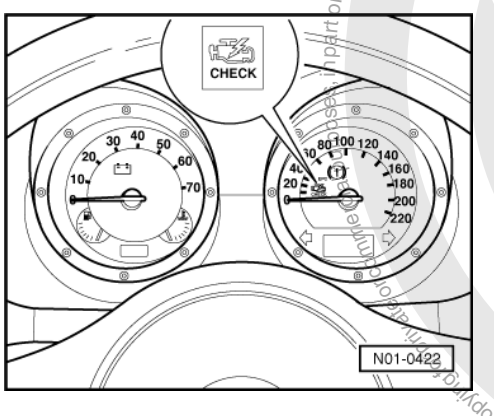

-> Location of exhaust emissions warning lamp

Note:

The exhaust emissions warning lamp can switch on in the continuous or flashing mode. Always interrogate fault memory => Page 7 .

- Flashing mode: There is a fault present which can damage the catalyst when continuing to drive at this power output. If this occurs, continue driving only at reduced output.

Protected by copyright. Copyright by Volkswagen AG. Volkswagen AG does not guarantee or accept any liability with respect to the correctness of information in this document. Copyright by Volkswagen AG. Copying for private or commercial purposes, in part or in whole, is not permitted unless authorised by Volkswagen AG.
satelettronica

- Continuous mode: There is a fault present which causes the emissions to deteriorate. Interrogate engine or gearbox control unit in this case.

- Interrogate the fault memory if the customer has a complaint or there is a driving characteristic problem and the exhaust gas warning lamp does not light up, this is because faults can be stored which will not switch the exhaust gas warning lamp on immediately.

Functional check:
- Switch on ignition:
  the exhaust emissions warning lamp must light-up.

If the exhaust emissions warning lamp does not light-up with ignition switched on:
- Check combi-instrument and exhaust emissions warning lamp as follows:

=> Electrical system self-diagnosis; Repair group 01
If the exhaust emissions warning lamp lights-up with ignition switched on, continue check as follows:
- Start engine and run at idling speed:
  The exhaust emissions warning lamp must go out after a few seconds.

If the exhaust emissions warning lamp does not go out:
- Interrogate fault memory, if necessary, repair any faults and then erase fault memory => Page 7 , interrogating and erasing fault memory.

1.6 - Connecting fault reader

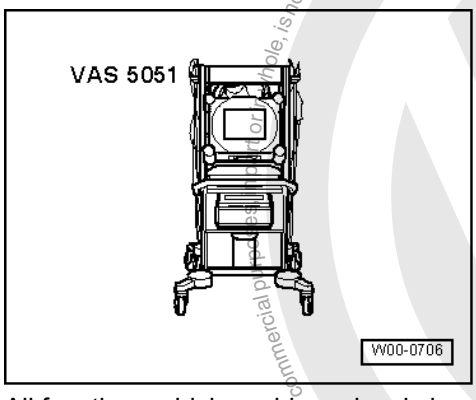

All functions which could previously be performed with V.A.G 1551/1552 can also be performed with the new tester VAS 5051 in the operating mode vehicle self-diagnosis.
=> Operating instructions for Vehicle Diagnosis, Testing and Information System VAS 5051.
Special tools, workshop equipment, testers, measuring instruments and auxiliary items required
- -> VAS 5051 Vehicle Diagnosis, Testing and Information System
- Diagnosis cable VAS 5051/1 or VAS 5051/3

Test conditions:

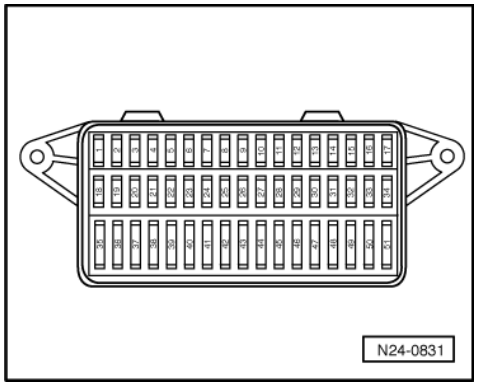

Protected by copyright. Copyright by Volkswagen AG. Volkswagen AG does not guarantee or accept any liability with respect to the correctness of information in this document. Copyright by Volkswagen AG.
satelettronica

- -> Fuses No. 1, 3, 11, 15, 23, 30, 31, 32, 34, 36, 37, 39 and 40 must be OK.
- The battery voltage must be at least 11.5 V.
- Earth connection between engine (at bell housing) and body (under battery) OK.
- Earth connection in plenum chamber OK.

Connecting VAS 5051

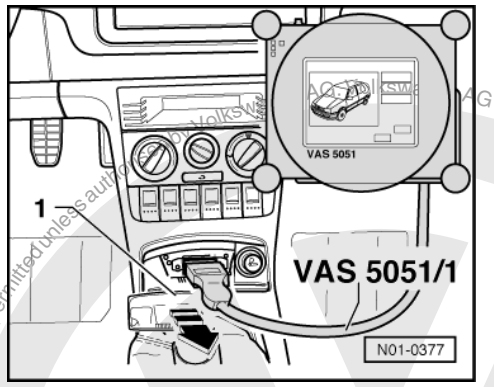

- -> Pull out ashtray -1-.
- Fit connector from diagnosis cable VAS 5051/1 or VAS 5051/3 to diagnosis connection.
- Depending upon desired function:
  Switch ignition on
  or
  Start engine => Page 2 , Table "Selectable functions".

Selecting operating mode:

- Press button on display for "Vehicle self-diagnosis".

Selecting vehicle system:

- Press button "01 - Engine electronics" on display.

The control unit identification and coding are indicated on the display.

If the coding differs from the vehicle version:

- Check control unit coding and, if necessary, code engine control unit => Page 126

Selecting diagnosis function:

All diagnostic functions available are indicated on the display.

- Press button on display for desired function.

Notes:

The display zones in functions 04 - Basic setting or 08 - Read measured value block are shown from top to bottom.

The following test sequences are for fault reader V.A.G 1551.

Connecting V.A.G 1551

Special tools, workshop equipment, testers, measuring instruments and auxiliary items required

- V.A.G 1551 Fault reader
- V.A.G 1551/3 Cable

Protected by copyright. Copyright by Volkswagen AG. Volkswagen AG does not guarantee or accept any liability with respect to the correctness of information in this document. Copyright by Volkswagen AG. Protected by copyright. Copying for private or commercial purposes, in part or in whole, is not permitted unless authorised by Volkswagen AG.
satelettronica

Note:

The vehicle system tester V.A.G 1552 can be used instead of the fault reader V.A.G 1551, however a print-out is not possible.

Work sequence

- Connect fault reader V.A.G 1551 using cable V.A.G 1551/3.
- Depending upon desired function:
  Switch ignition on
  or
  Start engine => Page 2 , Table "Selectable functions".

Notes:

- If the display remains blank, check voltage supply for diagnostic connection according to fault finding programme:

=> Current flow diagrams, Electrical fault finding and Fitting locations

- If the display does not indicate as described in the work sequence:

=> Fault reader operating instructions

- If due to an input fault "Fault in the data transfer!" is displayed, pull wire off fault reader, reconnect and repeat work step.

-> Indicated on display:

```
V.A.G - SELF DIAGNOSIS      HELP
     1 - Rapid data transfer*
     2 - Flash code output*
```

* Appears alternately

- Operate fault reader taking into account the information on the display:
- Press key 1 for "Rapid data transfer".
- Press keys 0 and 1 for address word "Engine electronics" and confirm entry with Q key.

-> The control unit identification and the coding will appear on the display, e.g.:

```
6K0906032M
```

- 6K0906032M = Part No. of control unit (for up-to-date control unit version see parts film)
- ME 7.5.10 = System designation and version
- 2921 = Program level number
- Coding 00001 = Control unit coding
- WSC xxxxx = Workshop code from V.A.G 1551, of the workshop who carried out the last coding. (If the factory coding has not been changed, WSC 00000 appears)

Note:

Replace control unit if the control version displayed does not correspond to the vehicle

=> Page 125 .

An incorrectly coded engine control unit leads to:

- Engine running faults (gear change jerks, load change jerks, etc.)
- Increased fuel consumption
- Increased exhaust gas emissions
- Faults stored in fault memory which are not actually present
- Functions will not be performed (Lambda regulation, activation of the activated charcoal filter system, etc.).
- Reduced gearbox life

Copyright by Volkswagen AG. Volkswagen AG does not guarantee or accept any liability with respect to the correctness of information in this document. Copyright by Volkswagen AG. Proprietary and copyright protected worldwide. Copying for private or commercial purposes, in whole or in part, is not permitted unless authorised by Volkswagen AG.
satelettronica

If the coding differs from the vehicle version, then:

- Checking control unit coding => Page 126 ,
  coding engine control unit
- Press ⇒key.

-> Indicated on display:

```
Rapid data transfer      HELP
Select function XXX
```

- Further measures see repair procedures.

2 - Fault memory

2.1 - Fault memory

Interrogate fault memory of all control units
=> Page 8 , Automatic test sequence

2.2 - Interrogating and erasing fault memory of engine control unit

Special tools, workshop equipment, testers, measuring instruments and auxiliary items required

- Fault reader V.A.G 1551 or vehicle system tester V.A.G 1552 with cable V.A.G 1551/3A

Work sequence

Note:

All functions which could previously be performed with V.A.G 1551/1552 can also be performed with the new tester VAS 5051.

- Connect fault reader V.A.G 1551 (V.A.G 1552). Start engine and select "Address word" 01 of engine control unit. When doing this the engine must be running at idling speed.
  (Connecting fault reader and selecting engine control unit => Page 4 .)

Only when engine does not start:

- Operate starter for approx. 6 seconds and then do not switch off the ignition.

- Switch on fault reader printer with the print key. The warning lamp in key must light up.

-> Indicated on display:

```
Rapid data transfer      HELP
Select function XX
```

- Operate fault reader taking into account the information on the display:
- Press keys 0 and 2 for function "Interrogate fault memory" and confirm entry with Q key.

-> The number of faults stored or "No fault recognised!" will be shown on the display.

```
X Faults recognised!
```

If no fault is stored:

- Press ⇒key.

Protected by copyright. Copying for private or commercial purposes, in part or in whole, is not permitted unless authorised by Volkswagen AG. Volkswagen AG does not guarantee or accept any liability with respect to the correctness of information in this document. Copyright by Volkswagen AG.
satelittonica

If one or more faults are stored:

The stored faults will be displayed and printed out one after the other.

-> After the stored faults have been printed out, the display will show:

```
Rapid data transfer      HELP
Select function XX
```

- Press keys 0 and 5 for the function "Erase fault memory" and confirm entry with Q key.

-> Indicated on display:

```
Rapid data transfer
Fault memory is erased!
```

Note:

If the ignition is switched off between "Interrogate fault memory" and "Erase fault memory" the fault memory will not be erased.

- Press ⇒key.

-> Indicated on display:

```
Rapid data transfer      HELP
Select function XX
```

- Press keys 0 and 6 for the function "End output" and confirm entry with the Q key.

-> Indicated on display:

```
Rapid data transfer      HELP
Enter address word XX
```

- Switch off ignition.
- Rectify faults printed out using fault table:
  SAE P0 codes=> Page 13

Only engine codes ANW, AUD

- Read readiness code=> Page 23 .

2.3 - Automatic test sequence

During test and assembly work faults can be recognised from other control units like e.g. plug disconnected. Therefore, on completion, the fault memories of all control units must be interrogated and erased. To do this:

- Press key 0 twice for address word "Automatic test sequence" and confirm entry with Q key. The V.A.G 1551 transmits all known address words one after the other.

When a control unit answers with its identification the number of stored faults appears on the display or "No fault recognised".

Any system faults that are stored will be displayed one after the other and printed out. The V.A.G 1551 will then transmit the next address word.

-> The automatic test sequence has ended when following is indicated on display:

```
Rapid data transfer      HELP
Enter address word XX
```

- Erase all fault memories and then carry out a road test.

Protected by copyright. Copying for private or commercial purposes, in part or in whole, is not permitted unless authorised by Volkswagen AG. Volkswagen AG does not guarantee or accept any liability with respect to the correctness of information in this document. Copyright by Volkswagen AG.
satelettronica

Observe the valid safety measures during a test drive => Page 29 .

During the road test the following operating conditions must be fulfilled:
- The coolant temperature must exceed 80 °C .
- When the temperature is reached, the operating conditions
  Idling
  Part throttle
  Full throttle
  Overrun
  must be attained several times.
- At full throttle the speed must exceed 3500 rpm.

- Again interrogate the fault memories of all control units using the "automatic test sequence".

If no fault is stored:

- Press the ⇒key.
- Press keys 0 and 6 for the function "End output" and confirm entry with the Q key.
- Switch off ignition.

3 - Fault table: SAE P0 codes

3.1 - Fault table: SAE P0 codes

Notes:

- The fault code overview is listed according to SAE or V.A.G code.
- Electronic accelerator "EPC" relevant faults are indicated additionally by the electronic accelerator warning lamp ("EPC warning lamp") in dash panel insert.
- Explanation of the fault types (e.g. "open circuit/short circuit to earth"):

=> Fault reader operating instructions

- If components are indicated as faulty:
  First check the wiring and connectors to these components as well as the system earth connections according to current flow diagram. This is particularly relevant if faults are output as "occurring sporadically" (SP).
- Erase fault memory after rectifying fault =>Page 7 .

V.A.G 1551 print out, e.g.:

16497 P0113 035

Intake air temperature sender -G42

Signal too large

Sporadic fault

Explanation:

- 16497 = Fault code
- P0113 = Additional fault code (only for USA at present and disregard)
- 035 = Fault type as a number
- Intake air temperature sender -G42 = Faulty current path or incorrect location
- Signal too large = Fault type as text
- Sporadic faults = Faults that are not always present e.g. loose contact

Fault code		Fault text	Fault elimination
SAE	V.A.G		

Protected by copyright. Copying for private or commercial purposes, in part or in whole, is not permitted unless authorised by Volkswagen AG. Volkswagen AG does not guarantee or accept any liability with respect to the correctness of information in this document. Copyright by Volkswagen AG.
satelettronica

Fault code		Fault text	Fault elimination
P0106	16490	Intake manifold pressure/air pressure => - G71/-F96implausible signal	- Check intake manifold pressure sender =>Page 84
P0107	16491	Intake manifold pressure/air pressure => - G71/-F96signal too low	
P0108	16492	Intake manifold pressure/air pressure => - G71/-F96signal too high	
P0112	16496	Intake air temperature sender -G42 signal too high	- Check intake air temperature sender => Page 86
P0113	16497	Intake air temperature sender -G42 signal too high	
P0116	16500	Coolant temperature sender -G62 implausible signal	- Check coolant temperature sender => Page 90
P0117	16501	Coolant temperature sender -G62 signal too low	- Check thermostat; => Repair group 19; Removing and installing parts of cooling system; Parts of cooling system, engine-side Parts of cooling system, engine-side
P0118	16502	Coolant temperature sender -G62 signal too high	

Fault code		Fault text	Fault elimination
SAE	V.A.G		
P0130	16514	Bank 1 probe 1 electrical fault in current circuit	- Check Lambda probe and Lambda regulation before catalyst => Page 111
P0131	16515	Bank 1 probe 1 voltage too low	- Check Lambda probe heating before catalyst => Page 74
P0132	16516	Bank 1 probe 1 voltage too high	
P0133	16517	Bank 1 probe 1 signal too slow	
P0134	16518	Bank 1 probe 1 no activity	
P0135	16519	Bank 1 probe 1 heating current circuit electrical fault	

Fault code		Fault text	Fault elimination
SAE	V.A.G		
P0136	16520	Bank 1 probe 2 electrical fault in current circuit	- Check Lambda probe and Lambda control after catalyst => Page 116
P0137	16521	Bank 1 probe 2 voltage too low	- Check Lambda probe heating after catalyst => Page 78
P0138	16522	Bank 1 probe 2 voltage too high	
P0139	16523	Bank 1 probe 2 signal too slow	
P0140	16524	Bank 1 probe 2 no activity	
P0141	16525	Bank 1 probe 2 heating current circuit electrical fault	

Fault code		Fault text	Fault elimination
SAE	V.A.G		
P0170	16554	Bank 1, fuel measuring system faulty	- Check fuel pressure regulator and holding pressure => Page 102
			- Check injectors =>Page 96

Copyright by Volkswagen AG. Copying for private or commercial purposes, in part or in whole, is not permitted unless authorised by Volkswagen AG. Volkswagen AG does not guarantee or accept any liability with respect to the correctness of information in this document.
satelettronica

			- Check fuel pump: => Repair group 20; Removing and installing parts of fuel system; Check fuel pump Check fuel pump
			- Check intake system for leaks => Page 106
			- Check vacuum pipes for leaks

Fault code		Fault text	Fault elimination
SAE	V.A.G		
P0171	16555	Bank 1, fuel measuring system, system too lean	- Check fuel pressure regulator and holding pressure =>Page 102
			- Check injectors =>Page 96
			- Check fuel pump: => Repair group 20; Removing and installing parts of fuel system; Check fuel pump Check fuel pump
			- Check intake system for leaks => Page 106
			- Check vacuum pipes for leaks

Fault code		Fault text	Fault elimination
SAE	V.A.G		
P0172	16556	Bank 1, fuel measuring system, system too rich	- Check fuel pressure regulator and holding pressure => Page 102
			- Check injectors =>Page 96
			- Check tank venting valve => Page 19 , final control diagnosis
			- Check Lambda probe and Lambda regulation before catalyst => Page 111
			- Check Lambda probe and Lambda regulation after catalyst => Page 116

Fault code		Fault text	Fault elimination
SAE	V.A.G		
P0300	16684	Misfiring recognised	- Check injectors=>Page 96
P0301	16685	Cyl. 1 misfiring recognised	- Removing and installing parts of the ignition system => Page 139
P0302	16686	Cyl. 2 misfiring recognised	- Check ignition transformer => Page 144
P0303	16687	Cyl. 3 misfiring recognised	- Check misfiring detection => Page 150
P0304	16688	Cyl. 4 misfiring recognised	

Fault code		Fault text	Fault elimination
SAE	V.A.G		
P0321	16705	Engine speed sender -G28 implausible signal	- Check engine speed sender =>Page 94
P0322	16706	Engine speed sender -G28 no signal	
P0327	16711	Knock sensor 1 -G61 signal too low	- Check knock sensor => Page 148

Protected by copyright. Copyright by Volkswagen AG. Volkswagen AG does not guarantee or accept any liability with respect to the correctness and completeness of this document. Copyright by Volkswagen AG. Protected by copyright. Copying for private or commercial purposes, in part or in whole, is not permitted unless authorised by Volkswagen AG.
satelettronica

P0328	16712	Knock sensor 1 -G61 signal too high	
P0341	16725	Camshaft pos. sensor, =>sender -G40 implausible signal	- Check Hall sender =>Page 143
P0342	16726	Camshaft pos. sensor, =>sender -G40 signal too low	
P0343	16727	Camshaft pos. sensor, =>sender -G40 signal too high	
P0422	16806	Bank 1 main catalyst efficiency to low	- Check catalyst: => Repair group 26; Removing and installing parts of exhaust system; Checking catalyst Checking catalyst

Fault code		Fault text	Fault elimination
SAE	V.A.G		
P0440	16824	Tank venting system faulty	- Check tank venting valve => Page 19 , Final control diagnosis
P0441	16825	Tank venting valve flow rate faulty	- Check hoses and connecting pipes from fuel tank to throttle valve control part: => Repair group 20; Activated charcoal filter system; Checking activated charcoal filter system for leaks Checking activated charcoal filter system for leaks

Fault code		Fault text	Fault elimination
SAE	V.A.G		
P0501	16885	Vehicle speed signal implausible	- Check speed signal => Page 130
P0506	16890	Idling speed control, Revs below specification	- Check idling speed control => Page 109 , Idling check
P0507	16891	Idling speed control, Revs above specification	
P0532	16916	A/C pressure sensor -G65 signal too low	- Check high pressure sender -G65 => Heating, air conditioning; => Repair group 87
P0533	16917	A/C pressure sensor -G65 signal too high	
P0560	16944	Voltage supply signal implausible	- Check voltage supply => Page 123
P0562	16946	Voltage supply too low	- Procedure after interrupting voltage supply => Page 125
P0563	16947	Voltage supply too high	

Fault code		Fault text	Fault elimination
SAE	V.A.G		
P0571	16955	Brake light switch -F,implausible signal1)	- Check brake light switch and brake pedal switch => Page 133
P0600	16984	Drive train data bus message missing	- Check matching resistor for data bus => Page 136
P0601	16985	Control unit defective	- Replace engine control unit => Page 125
P0604	16988	Control unit defective	
P0605	16989	Control unit defective	
P0606	16990	Control unit defective	

1) The system monitors both brake light switch -F and brake pedal switch -F47.

Copyright by Volkswagen AG. Volkswagen AG does not guarantee or accept any liability with respect to the correctness of information in this document. Copyright by Volkswagen AG. Protected by copyright. Copying for private or commercial purposes, in part or in whole, is not permitted unless authorised by Volkswagen AG.
satelettronica

4 - Fault table: SAE P1 codes

4.1 - Fault table: SAE P1 codes

Notes:

- The fault code overview is listed according to SAE or V.A.G code.
- Erase fault memory after rectifying fault =>Page 7 .

Fault code		Fault text	Fault elimination
SAE	V.A.G		
P1102	17510	Bank 1, probe 1 heating element circuit, short to positive	- Check Lambda probe heating before catalyst => Page 74
P1105	17513	Bank 1, probe 2 heating element circuit short to positive	- Check Lambda probe heating after catalyst => Page 78
P1111	17519	Lambda control Bank 1 system too lean	- Check Lambda probe and Lambda control before catalyst => Page 111
P1112	17520	Lambda control Bank 1 system too rich	
P1113	17521	Bank 1, probe 1 internal resistance too high	- Check Lambda probe heating before catalyst => Page 74
P1114	17522	Bank 1, probe 2 internal resistance too high	- Check Lambda probe heating after catalyst => Page 78

Fault code		Fault text	Fault elimination
SAE	V.A.G		
P1115	17523	Bank 1, probe 1 heating element circuit short to earth	- Check Lambda probe heating before catalyst => Page 74
P1116	17524	Bank 1, probe 1 heating element circuit, open circuit	
P1117	17525	Bank 1, probe 2 heating element circuit short to earth	- Check Lambda probe heating after catalyst => Page 78
P1118	17526	Bank 1, probe 2 heating element circuit open circuit	
P1127	17535	Bank 1, mixture adaption (mult.) system too rich	- Check fuel pressure regulator and holding pressure => Page 102
			- Check injectors =>Page 96
			- Check tank venting valve => Page 19 , Final control diagnosis

Fault code		Fault text	Fault elimination
SAE	V.A.G		
P1128	17536	Bank 1 mixture adaption (mult.) system too lean	- Check fuel pressure regulator and holding pressure => Page 102
			- Check injectors =>Page 96
			- Check fuel pump: => Repair group 20; Removing and installing parts of fuel system; Checking fuel pump Checking fuel pump
			- Check intake system for leaks => Page 106

Protected by copyright. Copyright by Volkswagen AG. Volkswagen AG does not guarantee or accept any liability with respect to the correctness of information in this document. Copying for private or commercial purposes, in part or in whole is not permitted unless authorised by Volkswagen AG.
satelettronica

			- Check exhaust system for leaks: => Repair group 26; Removing and installing parts of exhaust system
			- Check vacuum pipes for leaks

Fault code		Fault text	Fault elimination
SAE	V.A.G		
P1136	17544	Bank 1, mixture adaption (add.) system too lean	- Check fuel pressure regulator and holding pressure => Page 102
			- Check injectors =>Page 96
			- Check fuel pump: => Repair group 20; Removing and installing parts of fuel system; Checking fuel pump Checking fuel pump
			- Check intake system for leaks => Page 106
			- Check exhaust system for leaks: => Repair group 26; Removing and installing parts of exhaust system
			- Check vacuum pipes for leaks

Note:

add. = additive means, the fault only has an effect at idling speed.

Fault code		Fault text	Fault elimination
SAE	V.A.G		
P1137	17545	Bank 1, mixture adaption (add.) system too rich	- Check fuel pressure regulator and holding pressure => Page 102
			- Check injectors =>Page 96
			- Check tank venting valve => Page 19 , Final control diagnosis
P1142	17550	Load determination, level not reached	- Check accelerator pedal position sender: => Repair group 20; Electronic power control (EPC); Checking accelerator pedal position sender Checking accelerator pedal position sender
P1143	17551	Load determination, level exceeded	

Note:

add. = additive means, the fault only has an effect at idling speed.

Fault code		Fault text	Fault elimination
SAE	V.A.G		
P1155	17563	Intake manifold pressure sender -G71short to positive1)	- Check intake manifold pressure sender =>Page 84
P1156	17564	Intake manifold pressure sender -G71 open circuit/short to earth1)	
P1157	17565	Intake manifold pressure sender -G71 voltage supply1)	

satelettronica
Protected by copyright. Copying for private or commercial purposes, in part or in whole, is not permitted unless authorised. Volkswagen AG does not guarantee or accept any liability with respect to the correctness of information in this document. Copyright by Volkswagen AG.

P1158	17566	Intake manifold pressure sender-G71 implausible signal1)	

1) Engine control unit switches on the EPC warning lamp in dash panel insert with this fault. Significance of EPC warning lamp => 2 .

Fault code		Fault text	Fault elimination
SAE	V.A.G		
P1171	17579	Angle sender 2 for throttle valve drive -G188 implausible signal 1)	- Check throttle valve control part => Page 81
P1172	17580	Angle sender 2 for throttle valve drive -G188 signal too low 1)	
P1173	17581	Angle sender 2 for throttle valve drive -G188 signal too high 1)	

1) If this fault occurs the engine control unit switches on the EPC warning lamp in dash panel insert. Significance of EPC warning lamp => 2 .

Fault code		Fault text	Fault elimination
SAE	V.A.G		
P1176	17584	Bank 1 Lambda correction after cat. control limit reached	- Check Lambda probe ageing before catalyst=> Page 120
			- Check Lambda probe and Lambda regulation after catalyst => Page 116
			- Check intake system for leaks => Page 106
P1196	17604	Bank 1, probe 1 heating current circuit electrical fault	- Check Lambda probe heating before catalyst => Page 74
P1198	17606	Bank 1, probe 2 heating current circuit electrical fault	- Check Lambda probe heating after catalyst => Page 78

Fault code		Fault text	Fault elimination
SAE	V.A.G		
P1201	17609	Injector Cyl. 1 -N30 electrical fault in current circuit	- Check injectors =>Page 96
P1202	17610	Injector Cyl. 2 -N31 electrical fault in current circuit	
P1203	17611	Injector Cyl. 3 -N32 electrical fault in current circuit	
P1204	17612	Injector Cyl. 4 -N33 electrical fault in current circuit	
P1213	17621	Injector Cyl. 1 -N30 short to positive	
P1214	17622	Injector Cyl. 2 -N31 short to positive	
P1215	17623	Injector Cyl. 3 -N32 short to positive	
P1216	17624	Injector Cyl. 4 -N33 short to positive	
P1225	17633	Injector Cyl. 1 -N30 short to earth	
P1226	17634	Injector Cyl. 2 -N31 short to earth	
P1227	17635	Injector Cyl. 3 -N32 short to earth	
P1228	17636	Injector Cyl. 4 -N33 short to earth	

Fault code		Fault text	Fault elimination
SAE	V.A.G		

satelettronica

Fault code		Fault text	Fault elimination
P1237	17645	Injector Cyl. 1 -N30 open circuit	- Check injectors =>Page 96
P1238	17646	Injector Cyl. 2 -N31 open circuit	
P1239	17647	Injector Cyl. 3 -N32 open circuit	
P1240	17648	Injector Cyl. 4 -N33 open circuit	
P1250	17658	Fuel level too low	- Fill fuel tank
P1325	17733	Cylinder 1 knock control, control limit reached	- Fill fuel tank with at least 95 RON
P1326	17734	Cylinder 2 knock control, control limit reached	- Check knock sensor => Page 148
P1327	17735	Cylinder 3 knock control, control limit reached	- Eliminate cause for abnormal engine running noises
P1328	17736	Cylinder 4 knock control, control limit reached	- Loosen knock sensor and tighten again to 20 Nm

Fault code		Fault text	Fault elimination
SAE	V.A.G		
P1335	17743	Engine torque monitoring system 2, control limit surpassed1)	- Check intake air temperature sender => Page 86
P1336	17744	Engine torque monitoring system, control limit surpassed	- Check coolant temperature sender => Page 84
P1340	17748	Camshaft position/crankshaft position sensor wrong allocation	- Check engine speed sender =>Page 143

1) Engine control unit switches on the EPC warning lamp in dash panel insert with this fault. Significance of EPC warning lamp => 2 .

Fault code		Fault text	Fault elimination
SAE	V.A.G		
P1341	17749	Ignition output 1 short to earth	- Check ignition transformer => Page 144 - Check Hall sender => Page 143
P1342	17750	Ignition output 1 short to positive	
P1343	17751	Ignition output 2, short to earth	
P1344	17752	Ignition output 2, short to positive	
P1348	17756	Ignition output 1, open circuit	
P1349	17757	Ignition output 2, open circuit	
P1386	17794	Control unit defective	- Renew engine control unit (J220) => Page 125
P1388	17796	Control unit defective 1)	
P1393	17801	Ignition output 1 electrical fault in current circuit	- Check ignition transformer => Page 144
P1394	17802	Ignition output 2 electrical fault in current circuit	

1) If this fault occurs the engine control unit switches on the EPC warning lamp in dash panel insert. Significance of EPC warning lamp => 2 .

Fault code		Fault text	Fault elimination
SAE	V.A.G		
P1410	17818	Tank breathing valve -N80 short to positive	- Check activated charcoal filter solenoid valve 1=> Page 19 , Final control diagnosis
P1425	17833	Tank breathing valve -N80 short to earth	
P1426	17834	Tank breathing valve -N80 open circuit	

Protected by copyright. Copyright by Volkswagen AG. Volkswagen AG does not guarantee or assume any liability with respect to the correctness of information in this document. Copyright by Volkswagen AG. Any transmission or duplication, even of extracts, is not permitted without the express written consent of Volkswagen AG.
satelettronica

Fault code		Fault text	Fault elimination
SAE	V.A.G		
P1501	17909	Fuel pump relay-J17, short to earth	Check fuel pump relay: => Current flow diagrams, Electrical fault finding and Fitting locations binder
P1502	17910	Fuel pump relay -J17, short to positive	
P1523	17931	Crash signal from airbag control unit, Implausible signal	=> Body self-diagnosis; Repair group 01; Airbag system self-diagnosis Airbag system self-diagnosis
P1541	17949	Fuel pump relay -J17, open circuit	- Check fuel pump relay: => Current flow diagrams, Electrical fault finding and Fitting locations binder
P1542	17950	Angle sender for throttle valve drive -G187 implausible signal1)	- Check throttle valve control part => Page 81
P1543	17951	Angle sender for throttle valve drive -G187 signal too low 1)	
P1544	17952	Angle sender for throttle valve drive -G187 signal too high 1)	
P1545	17953	Throttle valve control malfunction 1)	
P1558	17966	Throttle valve drive -G186 electrical fault in current circuit 1)	

1) If this fault occurs the engine control unit switches on the EPC warning lamp in dash panel insert. Significance of EPC warning lamp => 2 .

Fault code		Fault text	Fault elimination
SAE	V.A.G		
P1559	17967	Throttle valve control part -J338 fault in basic setting 1)	- Adapt engine control unit to the throttle valve control part => Page 127
P1560	17968	Maximum engine revs surpassed	- Repair mechanical damage
P1564	17972	Throttle valve control part -J338 low voltage at basic setting 1)	- Check battery, charge if needed Adapt engine control unit to throttle valve control part => Page 127
P1565	17973	Throttle valve control part -J338 lower limit not reached 1)	- Check throttle valve control part=> Page 81
P1568	17976	Throttle valve control part -J338 mechanical fault 1)	
P1570	17978	Engine control unit blocked	- Adapt engine control unit (J220) to electronic immobilizer => Page 129
P1579	17987	Throttle valve control part -J338 adaption not started1)	- Adapt engine control unit to throttle valve control part => Page 127

1) If this fault occurs the engine control unit switches on the EPC warning lamp in dash panel insert. Significance of EPC warning lamp => 2 .

Fault code		Fault text	Fault elimination
SAE	V.A.G		
P1600	18008	Voltage supply terminal 15 voltage too low	- Check control unit voltage supply => Page 123 Check alternator: => Current flow diagrams, Electrical fault finding and Fitting locations
P1602	18010	Voltage supply terminal 30 voltage too low	

Protected by copyright. Copying for private or commercial purposes, in part or in whole, is not permitted unless authorised by Volkswagen AG. Volkswagen AG does not guarantee or accept any liability with respect to the correctness of information in this document. Copyright by Volkswagen AG.
satelettronica

P1603	18011	Control unit defective	- Renew engine control unit (J220) => Page 125
P1604	18012	Control unit defective 1)	
P1610	18018	Control unit defective	
P1612	18020	Engine control unit incorrectly coded	- Code engine control unit => Page 126
P1626	18034	Drive train data bus no message from gearbox CU	- Check matching resistor of data bus => Page 136

1) If this fault occurs the engine control unit switches on the EPC warning lamp in dash panel insert. Significance of EPC warning lamp => 2 .

Fault code		Fault text	Fault elimination
SAE	V.A.G		
P1630	18038	Accelerator pedal position sender -G79 signal too low 1)	- Check accelerator pedal position sender: => Repair group 20; Electronic power control (EPC); Check accelerator pedal position sender Check accelerator pedal position sender
P1631	18039	Accelerator pedal position sender -G79 signal too high 1)	
P1633	18041	Accelerator pedal position sender 2 -G185 signal too low 1)	
P1634	18042	Accelerator pedal position sender 2 -G185 signal too high 1)	
P1639	18047	Accelerator pedal position senders 1/2 -G79 +G185 implausible signal 1)	

1) If this fault occurs the engine control unit switches on the EPC warning lamp in dash panel insert. Significance of EPC warning lamp => 2 .

Fault code		Fault text	Fault elimination
SAE	V.A.G		
P1640	18048	Control unit defective	- Renew engine control unit (J220) => Page 125
P1648	18056	Drive train data bus defective	- Check matching resistor of data bus => Page 136
P1649	18057	Drive train data bus no messages from ABS control unit	
P1650	18058	Drive train data bus no message from combi-instrument	

Fault code		Fault text	Fault elimination
SAE	V.A.G		
P1676	18084	Fault lamp for electric accelerator operation -K132 electrical fault in current circuit	- Check fault lamp: => Repair group 20; Electronic power control (EPC); Checking fault lamp for electronic accelerator operation Checking fault lamp for electronic accelerator operation
P1677	18085	Fault lamp for electric accelerator operation -K132 short to positive	
P1678	18086	Fault lamp for electric accelerator operation -K132 short to earth	

Protected by copyright. Copying for private or commercial purposes, in part or in whole, is not permitted unless authorised by Volkswagen AG. Volkswagen AG does not guarantee or accept any liability with respect to the correctness of information in this document. Copyright by Volkswagen AG.

sateletronica

Fault code		Fault text	Fault elimination
P1679	18087	Fault lamp for electric accelerator operation - K132 open circuit	

Fault code		Fault text	Fault elimination
SAE	V.A.G		
P1690	18098	Self-diagnosis fault lamp -K83 Current circuit electrical fault	- Check exhaust warning lamp => Page 3
P1691	18099	Self-diagnosis fault lamp -K83 Open circuit	
P1692	18100	Self-diagnosis fault lamp -K83 Short to earth	
P1693	18101	Self-diagnosis fault lamp -K83 current circuit electrical fault	
P1853	18261	Drive train data bus implausible message from ABS CU	- Check data bus matching resistor => Page 136

5 - Final control diagnosis

5.1 - Final control diagnosis

5.2 - Performing final control diagnosis

The final control diagnosis activates the following components in the stated sequence:

1. Tank venting valve (N80)

Special tools, workshop equipment, testers, measuring instruments and auxiliary items required

- Fault reader V.A.G 1551 or vehicle system tester V.A.G 1552 with cable V.A.G 1551/3A
- Test box V.A.G 1598/22
- Hand multimeter V.A.G 1526 or multimeter V.A.G 1715
- Diode test lamp V.A.G 1527
- Adapter set V.A.G 1594
- Current flow diagram

Check conditions

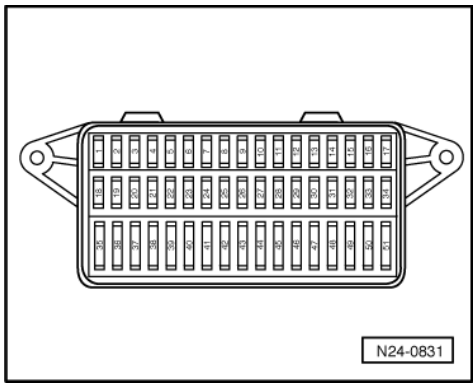

- -> The fuses 1, 11, 31 and 36 must be OK.
- The battery voltage must be at least 11.5 V.
- All electrical consumers, e.g. lights and rear window heating must be switched off.

Protected by copyright. Copying for private or commercial purposes, in part or in whole, is not permitted unless authorised by Volkswagen AG. Volkswagen AG does not guarantee or accept any liability with respect to the correctness of information in this document. Copyright by Volkswagen AG.
satelettronica

- If the vehicle is equipped with an air conditioning system, this must be switched off.

Notes:
- The final control diagnosis can only be carried out if the engine is stationary and ignition switched on.
- The final control diagnosis will be broken off if the engine is started or a rotational impulse is recognised.
- If the final control diagnosis is not terminated by pressing the ⇒key, the tank venting valve will be activated for approx. 60 seconds during the final control diagnosis.
- The final control is checked acoustically or by touch.
- The electric fuel pump will run during the complete final control diagnosis.

- The final control diagnosis will be aborted after 10 minutes.
- If the final control diagnosis is to be repeated, the engine must be started briefly beforehand.

Work sequence
- Connect the fault reader V.A.G 1551 (V.A.G 1552). Then switch ignition on and select engine control unit with the "Address word" 01.
  (Connecting fault reader and selecting engine control unit => Page 4 .)

-> Indicated on display:

```
Rapid data transfer      HELP
Select function XX
```

- Operate fault reader taking into account the information on the display:
- Press keys 0 and 3 for the function "Final control diagnosis".

-> Indicated on display:

```
Rapid data transfer      Q
03 Final control diagnosis
```

Activate tank venting valve (N80) for activated charcoal filter:
- Confirm input with Q key.

-> Indicated on display:

```
Final control diagnosis
Tank venting valve-N80
```

The tank venting valve must click, until the final control diagnosis is terminated by pressing ⇒key.

If valve clicks:
- Press ⇒key.

-> Indicated on display:

```
Final control diagnosis
END
```

- Press ⇒key.

-> Indicated on display:

```
Rapid data transfer      HELP
Select function XX
```

- Press keys 0 and 6 for the "End output" function and confirm input with the Q key.
- Switch off ignition.

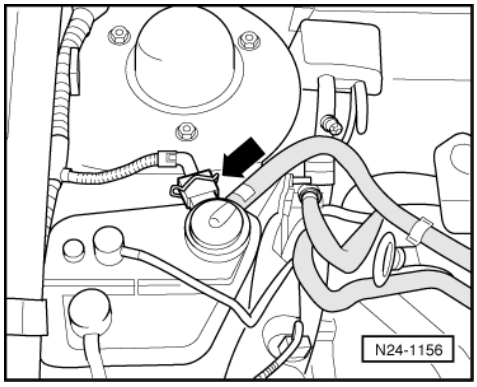

Protected by copyright. Copying for private or commercial purposes, in part or in whole, is not permitted unless authorised by Volkswagen AG. Volkswagen AG does not guarantee or accept any liability with respect to the correctness of information in this document. Copyright by Volkswagen AG.
satelettronica

If the valve does not click:

- -> Pull 2-pin connector off tank venting valve (N80) -arrow-.

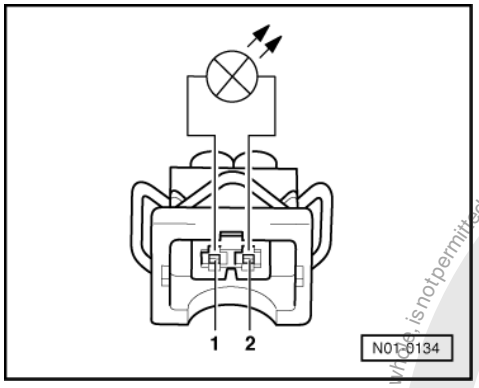

- -> Connect diode test lamp V.A.G 1527 using adapter cables from V.A.G 1594 to detached connector. The LED must flash (bright/darker)

LED flashes:

- Proceed with final control diagnosis until completed.
- Switch off ignition.
- Renew tank venting valve (N80):

=> Repair group 20; Activated charcoal filter system; Removing and installing parts of activated charcoal filter system Activated charcoal filter system Removing and installing parts of activated charcoal filter system

- Interrogate fault memory, if necessary, repair any faults and then erase fault memory => Page 7, interrogating and erasing fault memory.

LED does not flash:

- Proceed with final control diagnosis until completed.
- Switch off ignition.

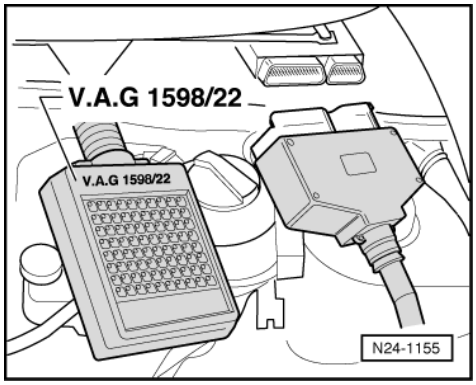

- Remove left plenum chamber cover.
- -> Connect test box V.A.G 1598/22 to control unit wiring harness.

Protected by copyright. Copying for private or commercial purposes, in part or in whole, is not permitted unless authorised by Volkswagen AG. Volkswagen AG does not guarantee or accept any liability with respect to the correctness of information in this document. Copyright by Volkswagen AG.
satelettronica

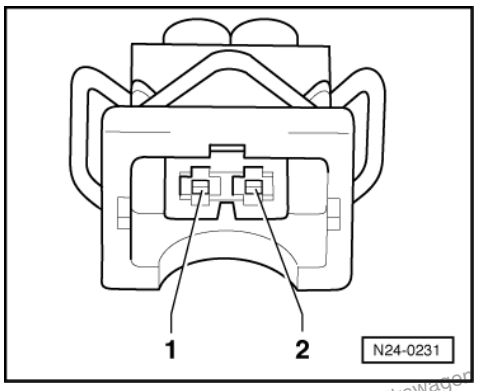

- -> Check wire between test box socket 14+2-pin connector contact 2 for open circuit using current flow diagram.
  Wire resistance: max. 1.5 ω
- Additionally check wire for short to battery positive and earth.
  Specification: ∞ω
- Check wire between 2 pin connector contact 1 and the fuel pump relay (J17) for open circuit using current flow diagram.
  Wire resistance: max. 1.5 ω

If no wiring fault is detected:

- Replace engine control unit
  => Page 125 .

6 - Readiness code

6.1 - Readiness code

Only engine codes ANW, AUD

6.2 - Function

The readiness code is an 8-digit number code which displays the status of the emission relevant diagnosis.

When the diagnosis for a system (e.g. catalyst), has been successfully completed, the corresponding position in the number code will change from 1 to 0.

The diagnosis is performed at regular intervals during normal driving. It is recommended that the readiness code be generated after performing repairs on an emission relevant system, to guarantee that these systems function correctly. If a fault is detected during the diagnosis it will be entered in the fault memory.

Each time the fault memory is erased or the voltage supply is interrupted the readiness code will be erased.

6.3 - Reading readiness code

Special tools, workshop equipment, testers, measuring instruments and auxiliary items required

- Fault reader V.A.G 1551 or vehicle system tester V.A.G 1552 with cable V.A.G 1551/3A

Work sequence

- Connect the fault reader V.A.G 1551 (V.A.G 1552). Then switch ignition on and select engine control unit with the "Address word" 01.

Copyright by Volkswagen AG. Volkswagen AG does not guarantee or accept any liability with respect to the correctness of information in this document. Copying for private or commercial purposes, in part or in whole, is not permitted unless authorised by Volkswagen AG.
satelettronica

(Connecting fault reader and selecting engine control unit => Page 4 .)

-> Indicated on display:

```
Rapid data transfer      HELP
Select function XXX
```

- Press keys 1 and 5 for the "Readiness code" function and confirm entry with Q key.

Must appear on display when all diagnosis functions have been successfully completed:
-> Indicated on display:

```
Readiness code
00000000 - Test complete
```

- Press ⇒key.
- Press keys 0 and 6 for the "End output" function and confirm input with the Q key.

- Switch off ignition.

-> Indicated on display:

```
Readiness code
00101101 - Test not complete
```

One of the diagnostic checks has not run through successfully:
- Press ⇒key.
- Generate readiness code => Page 23 .

Significance of figures in 8-digit number block for readiness code

The readiness code is generated only when all display zones show 0								
1	2	3	4	5	6	7	8	Diagnostic function
							0	Catalyst
						0		Catalyst heating (currently no diagnosis/always "0")
					0			Activated charcoal filter system (tank venting system)
				0				Secondary air system (not fitted/always "0")
			0					Air conditioner (currently no diagnosis/always "0")
		0						Lambda probes
	0							Lambda probe heating
0								Exhaust gas recirculation (not fitted/always "0")

6.4 - Generating readiness code

Special tools, workshop equipment, testers, measuring instruments and auxiliary items required

- Fault reader V.A.G 1551 or vehicle system tester V.A.G 1552 with cable V.A.G 1551/3A

Test conditions

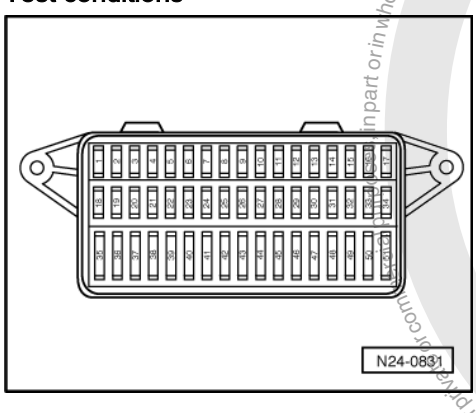

satelettronica
Volkswagen AG. Volkswagen AG does not guarantee or accept any liability with respect to the correctness of information in this document. Copyright by Volkswagen AG.
Protected by copyright. Copying for private or commercial purposes, in part or in whole, is not permitted unless authorised by Volkswagen AG.

- -> The fuses No. 1 and 11 must be OK.
- Vehicle stationary
- All electrical consumers, e.g. lights and rear window heating must be switched off.
- If the vehicle is equipped with an air conditioning system, this must be switched off.
- Exhaust system between catalyst and cylinder head must be free of leaks
- Coolant temperature must be at least 80 °C, =>display group 04, display zone 3.
- Intake air temperature less than 60°C
  =>display group 04, display zone 4

Work sequence

- Connect the fault reader V.A.G 1551 (V.A.G 1552). Then switch ignition on and select engine control unit with the "Address word" 01.
  (Connecting fault reader and selecting engine control unit => Page 4 .)

Work step 1: Interrogate fault memory

-> Indicated on display:

```
Rapid data transfer      HELP
Select function XXX
```

- Press keys 0 and 2 for function "Interrogate fault memory" and confirm entry with Q key.

-> The number of faults stored or "No fault recognised!" will be shown on the display.

```
X Faults recognised!
```

If a fault is stored:

- Rectify faults printed out using fault table:
  SAE P0 codes=> Page 13

If no fault is stored:

- Press ⇒key.

Work step 2: Erase fault memory

-> Indicated on display:

```
Rapid data transfer      HELP
Select function XXX
```

- Press keys 0 and 5 for the function "Erase fault memory" and confirm entry with Q key.

Note:

The readiness code is reset or erased each time fault memory is erased.

-> Indicated on display:

```
Rapid data transfer
Fault memory is erased!
```

Note:

If the ignition is switched off between "Interrogate fault memory" and "Erase fault memory" the fault memory will not be erased.

- Press ⇒key.

Work step 3: Matching the throttle valve control part to the engine control unit

-> Indicated on display:

Protected by copyright. Copyright by Volkswagen AG. Volkswagen AG does not guarantee or accept any liability with respect to the correctness of information in this document. Copyright by Volkswagen AG.
satelettronica

```
Rapid data transfer     HELP
Select function XXX
```

- Press keys 0 and 4 for the function "Initiating basic settings" and confirm entry with Q key.

-> Indicated on display:

```
Basic setting
Input display group number XXX
```

- Press keys 0, 6 and 0 for the "Display group number 60" and confirm entry with Q key.

-> Indicated on display:
(1...4 = Display zones)

```
System in basic setting     60
     xxx %     xxx %     x     ADP. runs
```

- Check specifications in display zones 3 and 4:
  Display zone 3: 0...9
  Display zone 4: ADP. runs, ADP. OK

-> Indicated on display:
(1...4 = Display zones)

```
System in basic setting 60
     xxx %     xxx %     9     ADP. OK
```

- Terminate engine basic setting at earliest after 30 seconds by pressing the⇒ key.

If the display does not indicate as described:

- Check throttle valve control part
  => Page 81 .

If the display indicates as described:

- Start engine and run at idling speed.

Work step 4: Activated charcoal filter system diagnosis (tank breathing system)

Note:

- During the work sequence the engine must not be switched off.

-> Indicated on display:

```
Rapid data transfer     HELP
Select function XXX
```

- Press keys 0 and 4 for the "Introduce basic setting" function and confirm entry with Q key.

-> Indicated on display:

```
Basic setting
Input display group number XXX
```

- Press keys 0, 7 and 0 for "Display group number 70" and confirm entry with Q key.

-> Indicated on display:
(1...4 = Display zones)

```
System in basic setting     70
     1     2     3     4
```

Protected by copyright. Copying for private or commercial purposes, in part or in whole, is not permitted unless authorised by Volkswagen AG. Volkswagen AG does not guarantee or accept any liability with respect to the correctness of information in this document. Copyright by Volkswagen AG.

sateletronica

Note:

The engine must not be loaded during this diagnosis because the diagnosis will be interrupted and will not be started again until the engine is revved-up.

When the diagnosis is initiated by the engine control unit the display in display zone 4 jumps from "Test OFF" to "Test ON"

- Run engine at idling speed until the specification "TVV OK" is displayed in display zone 4.

If the display does not indicate as described:

- Interrogate fault memory => Page 7 .

If the display indicates as described:

- Press C key.

Work step 5: Lambda regulation system diagnosis

-> Indicated on display:

```
Basic setting
Input display group number XXX
```

- Press keys 0, 3 and 7 for "Display group number 37" and confirm entry with Q key.

-> Indicated on display:
(1...4 = Display zones)

```
Read measured value block     37
     1     2     3     4
```

- Depress brake pedal.

  The engine speed is increased by the control unit to approx. 1100...1300 rpm.

- Allow the engine to continue running at increased idling speed until the specification "Syst. OK." is displayed in display zone 4.

If the display does not indicate as described:

- Interrogate fault memory => Page 7 .

If the display indicates as described:

- Press ⇒key.

  The engine speed decreases to idling speed.

Work step 6: Lambda probe ageing diagnosis (cycle duration monitor)

-> Indicated on display:

```
Rapid data transfer     HELP
Select function XXX
```

- Press keys 0 and 8 for the function "Read measured value block" and confirm entry with Q key.

-> Indicated on display:

```
Read measured value block
Input display group number XXX
```

Protected by copyright. Copying for private or commercial purposes, in part or in whole, is not permitted unless authorised by Volkswagen AG. Volkswagen AG does not guarantee or accept any liability with respect to the correctness of information in this document. Copyright by Volkswagen AG.
satelettronica

- Press keys 0, 3 and 0 for the "Display group number 30" and confirm entry with Q key.

-> Indicated on display:
(1...2 = Display zones)

```
Read measured value block 30
     1     2
```

- Check Lambda control status before catalyst (display zone 1):
  Specification: 1 1 1
  (Significance => Page 39)
- Check Lambda control status after catalyst (display zone 2):
  Specification: 1 1 1
  (Significance => Page 39)

Notes:

- The first position of the 3 digit number block fluctuates between 0 and 1 (Lambda probe heating on and off).
- Depending upon the status of the Lambda control the 3 digit number block can show 0 or 1.
- The bits in display zones 1 and 2 will not be set to 1 until the catalyst temperature has risen to above 400.0 °C (=> display group 34, display zone 2).

If the specifications are not obtained:

- Interrogate fault memory => Page 7 .

If the specifications are obtained:

- Press ⇒key.

-> Indicated on display:

```
Rapid data transfer      HELP
Select function XXX
```

- Press keys 0 and 4 for the "Introduce basic setting" function and confirm entry with Q key.

-> Indicated on display:

```
Basic setting
Input display group number XXX
```

- Press keys 0, 3 and 4 for "Display group number 34" and confirm entry with Q key.

-> Indicated on display:
(1...4 = Display zones)

```
System in basic setting      34
     1     2     3     4
```

- Depress brake pedal.

  The engine speed is increased by the control unit to
  approx. 1100...1300 rpm.

- Maintain the engine speed until the display
  in display zone 4 jumps from "Test OFF" to "Test ON". The catalyst temperature in display zone 2 must be min. 400 °C.

Note:

This process can take a few minutes.

- Check amplitude duration in display zone 3:
  Specification: 0.7... 2.00
- Continue to maintain engine speed until the specification "B1-P1" appears in

Protected by copyright. Copyright by Volkswagen AG.
Copyright by Volkswagen AG. Volkswagen AG does not guarantee or accept any liability with respect to the correctness of information in this document. Copyright by Volkswagen AG. Reproduction and publication in part or in whole, not permitted without express authorised by Volkswagen AG.
satelettronica

display zone 4.

If the display does not indicate as described:

- Interrogate fault memory => Page 7 .

If the display indicates as described:

- Press C key.

  The engine speed decreases to idling speed.

-> Indicated on display:

```
Basic setting
Input display group number XXX
```

- Press keys 0, 3 and 6 for "Display group number 36" and confirm entry with Q key.

-> Indicated on display:
(1...4 = Display zones)

```
System in basic setting      36
     1     2     3     4
```

- Depress brake pedal.

  The engine speed is increased by the control unit to approx. 1100...1300 rpm.

- Maintain the engine speed until the display in display zone 4 jumps from "Test OFF" to "Test ON". The catalyst temperature in display zone 2 must be min. 400 °C.

Note:

This process can take a few minutes.

- Check amplitude duration in display zone 3:
  Specification: 0.7... 2.00
- Continue to maintain engine speed until the specification "B1-P2 OK" appears in display zone 4.

If the display does not indicate as described:

- Interrogate fault memory => Page 7 .

If the display indicates as described:

- Press C key.

  The engine speed decreases to idling speed.

Work step 7: Catalyst diagnosis

Note:

The diagnosis will only be terminated if the Lambda probe ageing diagnosis is first successfully completed.

-> Indicated on display:

```
Basic setting
Input display group number XXX
```

- Press keys 0, 4 and 6 for "Display group number 46" and confirm entry with Q key.

-> Indicated on display:

Protected by copyright. Copying for private or commercial purposes, in part or in whole, is not permitted unless authorised by Volkswagen AG. Volkswagen AG does not guarantee or accept any liability with respect to the correctness of information in this document. Copyright by Volkswagen AG.
satelettronica

(1...4 = Display zones)

```
System in basic setting      46
     1     2     3     4
```

- Depress brake pedal.

  The engine speed is increased by the engine control unit to approx. 1100...1300 rpm.

- Maintain the engine speed until the display in display zone 4 jumps from "Test OFF" to "Test ON". The catalyst temperature in display zone 2 must be min. 400 °C.

- Check the amplitude ratio in display zone 3:
  Specification: max. 0.50
- Continue to maintain the speed until the specification "Cat B1 OK" appears in display zone 4.

If the display does not indicate as described:

- Interrogate fault memory => Page 7 .

If the display indicates as described:

- Press ⇒key.

  The engine speed decreases to idling speed.

- Read readiness code=> Page 22

7 - Measured value blocks

7.1 - Measured value blocks

7.2 - Safety precautions

Observe following if test and measuring instruments are required during a test drive:

- Test and measuring instruments must be secured to rear seat and operated by a 2nd person from this location.

  If test and measuring instruments are operated from front passenger's seat and the vehicle is involved in an accident, there is a possibility that the person sitting in this seat may receive serious injuries when the airbag is triggered.

7.3 - Read measured value block

The measured values in the functions read measured value block and basic setting are described during the individual component test. This table serves only as an overview.

Special tools, workshop equipment, testers, measuring instruments and auxiliary items required

- Fault reader V.A.G 1551 or vehicle system tester V.A.G 1552 with cable V.A.G 1551/3A

Protected by copyright. Copying for private or commercial purposes, in part or in whole, is not permitted unless authorised by Volkswagen AG. Volkswagen AG does not guarantee or accept any liability with respect to the correctness of information in this document. Copyright by Volkswagen AG.
satelettronica

Test conditions

- All electrical consumers, e.g. lights and rear window heating must be switched off
- If the vehicle is equipped with an air conditioning system, this must be switched off.
- No faults must be stored in fault memory
  => Page 7 , interrogating fault memory
- Coolant temperature must be at least 80 °C, =>display group 04, display zone 3.

Work sequence

- Connect fault reader V.A.G 1551 (V.A.G 1552). Start engine and select "Address word" 01 of engine control unit. When doing this the engine must be running at idling speed.
  (Connecting fault reader and selecting engine control unit => Page 4 .)

-> Indicated on display:

```
Rapid data transfer      HELP
Select function XXX
```

- Press keys 0 and 8 for the function "Read measured value block" and confirm entry with Q key.

-> Indicated on display:

```
Read measured value block
Input display group number XXX
```

- Select required display group number.

Note:

The display group number 1 is an example, to illustrate the sequence.

- Press keys 0, 0 and 1 for "Display group number 1" and confirm entry with Q key.

-> Indicated on display:
(1...4 = Display zones)

```
Read measured value block     1
     1     2     3     4
```

Note:

To change to another display group proceed as follows:

Display group	V.A.G 1551	V.A.G 1552
Higher	Press key 3	Press ↑key
Lower	Press key 1	Press ↓key
Skip	Press key C	Press key C

- If the specifications in all display zones are obtained, press ⇒key.

-> Indicated on display:

```
Rapid data transfer      HELP
Select function XXX
```

- Press keys 0 and 6 for the "End output" function and confirm input with the Q key.

- Switch off ignition.

Note:

Measured value blocks which are not described in this chapter are currently only intended for the research and development and production. The values displayed are not relevant for service department fault finding.

Protected by copyright. Copying for private or commercial purposes, in part or in whole, is not permitted unless authorised by Volkswagen AG. Volkswagen AG does not guarantee or accept any liability with respect to the correctness of information in this document. Copyright by Volkswagen AG.

satelettronica

8 - Evaluating measured value blocks, display groups 0...9 -Basic functions-

8.1 - Evaluating measured value blocks, display groups 0...9 -Basic functions-

Display group 1 -Basic functions-						
▪ Engine running at idling speed						
Read measured value block 1 ⇒				◂ Indicated on display		
xxxx rpm	xx.x °C	xx.x %	xxxxxxxx			
1	2	3	4	◂ Display zones	Specification	Evaluation
				Adjustment conditions for basic setting	1x111111	=> Page 31
			Lambda regulator before catalyst		-10.0...10.0 %	=> Page 41
		Coolant temperature			80.0...110.0 °C	=> Page 33
	Engine speed (idling speed)				810...900 rpm	=> Page 31

Evaluating display group 1, display zone 1 - Engine speed (idling speed)

Appears on display	Possible fault cause	Fault elimination
Less than specification	- Throttle valve control part sticking or defective	- Check throttle valve control part => Page 81 - Perform idling check => Page 109
Greater than specification	- Throttle valve control part sticking or defective	- Interrogate fault memory, => Page 7 - Check throttle valve control part => Page 81 - Perform idling check => Page 109

Significance of figures in 8-digit number block, display zone 4 - adjustment conditions

Significance if display = 1								
1	2	3	4	5	6	7	8	Significance
							1	Coolant temperature exceeds 80.0 °C
						1		Speed below 2000 rpm
					1			Throttle valve closed
				1				Lambda regulation OK.
			1					Idling recognised
		1						Air conditioner compressor switched off
	x							Not relevant
1								No faults recognised by self-diagnosis

Display group 2 -Basic functions-						
▪ Engine running at idling speed						
Read measured value block 2 ⇒				◂ Indicated on display		
xxxx rpm	xxx.x %	x.x ms	xxx mbar			
1	2	3	4	◂ Display zones	Specification	Evaluation
				Intake manifold pressure	250...500 mbar	=> Page 32
			Injection period		2.0...7.0 ms	=> Page 32

satelettronica
Copyright by Volkswagen AG. Volkswagen AG does not guarantee or accept any liability with respect to the correctness of information in this document. Copying for private or commercial purposes, in part or in whole, is not permitted unless authorised by Volkswagen AG.

	Engine load	15.0...30.0 %	=> Page 35
	Engine speed (idling speed)	810...900 rpm	=> Page 31

Evaluating display group 2, display zone 3 - Injection period

Appears on display	Possible fault cause	Fault elimination
Less than 2.0 ms	- Large amount of fuel from the activated charcoal filter system	- Check tank venting valve => Page 19 , Final control diagnosis
Larger than 7.0 ms	- Increased engine load due to electrical consumers, air conditioner, gear selected or P.A.S. on full lock	- Eliminate increased load (air conditioner, power assisted steering etc.)

Evaluating display group 2, display zone 4 - Intake manifold pressure

Appears on display	Possible fault cause	Fault elimination
Less than 250 mbar	- Large amount of unmetered air between intake manifold and air mass meter	- Check intake system for leaks => Page 84
Larger than 500 mbar	- Increased engine load due to electrical consumers, air conditioner, gear selected or P.A.S. on full lock	- Eliminate increased load (air conditioner, power assisted steering etc.) Check intake manifold pressure sender =>Page 84

Display group 3 -Basic functions-

▪ Engine running at idling speed

Read measured value block 3 ⇒ ◂ Indicated on display

xxxx rpm | xxx mbar | xxx.x % | xx.x°BTDC

1	2	3	4	◂ Display zones	Specification	Evaluation
				Ignition angle	-5.0...10.0 ° BTDC	---
				Throttle valve angle (Potentiometer 1 -G187)	0.2...5.0 %	=> Page 35
				Intake manifold pressure	250...500 mbar	=> Page 32
				Engine speed (idling speed)	810...900 rpm	=> Page 31

Note on display zone 3:

With the accelerator pedal floored the display value is approx. 100.0 %.

Display group 4 -Basic functions-

▪ Engine running at idling speed

Read measured value block 4 ⇒ ◂ Indicated on display

xxxx rpm | xx.xxx V | xxx.x °C | xxx.x °C

1	2	3	4	◂ Display zones	Specification	Evaluation
				Intake air temperature	-40.0...129.0 °C	=> Page 33
				Coolant temperature	80.0...110.0 °C	=> Page 33
				Engine control unit voltage supply	12.000...15.000 V	=> Page 33
				Engine speed (idling speed)	810...900 rpm	=> Page 31

Note on display zone 3:

The engine control unit will use the intake air temperature as a replacement value for an engine start (start temperature - replacement value) as soon as there is a fault stored in the fault memory, which affects the coolant

Protected by copyright. Copying for private or commercial purposes, in part or in whole, is not permitted unless authorised by Volkswagen AG. Volkswagen AG does not guarantee or accept any liability with respect to the correctness of information in this document. Copyright by Volkswagen AG.
satelettronica

temperature sender (G62). The temperature then rises according to a model stored in the control unit. When the engine has reached normal working temperature a fixed replacement value will be displayed after a certain period. This fixed value is also dependent upon the intake air temperature.

Note on display zone 4:

The total temperature range is given as the specification. The displayed value must be above ambient temperature.

Evaluating display group 4, display zone 2 - Control unit voltage supply

Appears on display	Possible fault cause	Fault elimination
Less than 12.000 V	- Alternator defective, battery heavily discharged	- Check alternator and battery voltage, charge battery: => Electrical system; Repair group 27
	- Battery heavily charged shortly after starting due to high charging current and current consumers	- Increase revs slightly for a few minutes and switch off current consumers
	- Transfer resistance in the current supply or the engine control unit earth connection	- Check engine control unit voltage supply => Page 123
	- Current draw when ignition is off	- Eliminate current draw
More than 15.000 V	- Voltage regulator on alternator defective	- Check voltage, replace regulator if necessary: => Electrical system; Repair group 27
	- Excess voltage due to jump starting or quick charging unit	- Interrogate fault memory => Page 7

Evaluating display group 4, display zone 3 - Coolant temperature

Appears on display	Possible fault cause	Fault elimination
Less than 80.0 °C	- Engine too cold	- If necessary carry out test drive
	- Coolant temperature sender or wiring to engine control unit	- Check coolant temperature sender =>Page 90
More than 110.0 °C	- Radiator soiled	- Clean radiator
	- Radiator fan not functioning	- Check radiator fan: => Repair group 19; Removing and installing parts of cooling system; Checking radiator fan Checking radiator fan
	- Thermostat defective (Thermostat)	- Check thermostat: => Repair group 19; Removing and installing parts of cooling system; Parts of cooling system - engine side Parts of cooling system - engine side
	- Coolant temperature sender or wiring to engine control unit	- Check coolant temperature sender =>Page 90
Constant -40.0 °C	- Wiring open circuit or short to positive	- Check coolant temperature sender =>Page 90
Constant 129.0 °C	- Short to earth	

Evaluating display group 4, display zone 4 - Intake air temperature

Appears on display	Possible fault cause	Fault elimination
Constant -40.0 °C	- Wiring open circuit or short to positive	- Check intake air temperature sender =>Page 86

Protected by copyright. Copyright by Volkswagen AG. Volkswagen AG does not guarantee or accept any liability with respect to the correctness of information in this document. Copyright by Volkswagen AG. Transmitted or communicated to third parties, in part or in whole, without the express authorisation of Volkswagen AG.
satelettronica

Constant 129.0 °C	- Short to earth	

Display group 5 -Basic functions-						
▪ Engine running at idling speed						
Read measured value block 5 ⇒				◂ Indicated on display		
xxxx rpm	xxx.x %	xxx km/h	Text			
1	2	3	4	◂ Display zones	Specification	Evaluation
				Operating mode: Idling, part throttle, enrichment, overrun, full throttle	Idling	---
			Road speed		0 km/h	---
		Engine load			15.0...30.0 %	=> Page 35
	Engine speed (idling speed)				810...900 rpm	=> Page 31

Display group 6 -Basic functions-						
▪ Engine running at idling speed						
Read measured value block 6 ⇒				◂ Indicated on display		
xxxx rpm	xxx.x %	xxx.x °C	xx.x %			
1	2	3	4	◂ Display zones	Specification	Evaluation
				Altitude correction factor	-50.0...20.0 %	---
			Intake air temperature		-40.0...129.0 °C	=> Page 33
		Engine load			15.0...30.0 %	=> Page 35
	Engine speed (idling speed)				810...900 rpm	=> Page 31

Note on display zone 3:

The total temperature range is given as the specification. The displayed value must be above ambient temperature.

9 - Evaluating measured value blocks, display groups 10...29 -Ignition-

9.1 - Evaluating measured value blocks, display groups 10...29 -Ignition-

Display group 10 -Ignition-						
▪ Engine running at idling speed						
Read measured value block 10 ⇒				◂ Indicated on display		
xxxx rpm	xxx.x %	xxx.x %	xx.x°BTDC			
1	2	3	4	◂ Display zones	Specification	Evaluation
				Ignition angle	-5.0...10.0 ° BTDC	---
			Throttle valve angle (Potentiometer 1 -G187)		0.2...5.0 %	=> Page 35
		Engine load			15.0...30.0 %	=> Page 35
	Engine speed (idling speed)				810...900 rpm	=> Page 31

Note on display zone 3:

With the accelerator pedal floored the display value must be approx. 100.0 %.

Copyright by Volkswagen AG. Volkswagen AG does not guarantee or accept any liability with respect to the correctness of information in this document. Copyright by Volkswagen AG.
satelettronica

Evaluating display group 10, display zone 2 - Engine load

Appears on display	Possible fault cause	Fault elimination
Less than 15.0 %	- Lesser values can only occur when driving in overrun	---
Larger than 30.0 %	- Rough idling (not running on all cylinders) - Throttle valve control part defective - Electric consumers switched on - Steering wheel at full lock	- Check injectors => Page 139 - Check throttle valve control part => Page 81 - Switch off electric consumers - Set steering wheel to centre position

Evaluating display group 10, display zone 3 - Throttle valve angle potentiometer 1

Appears on display	Possible fault cause	Fault elimination
More than 5 %	- Engine control unit not adapted to throttle valve control part - Throttle valve potentiometer in throttle valve control part defective - Throttle valve sticking	- Adapt engine control unit to throttle valve control part => Page 127 - Check throttle valve control part => Page 81 - Eliminate cause

Only engine codes ANW, AUD

Display group14 -Ignition- Misfire recognition total						
▪ Whilst driving						
Read measured value block 14			⇒	◂ Indicated on display		
xxxx rpm	xx.x %	xxx	Text			
1	2	3	4	◂ Display zones	Specification	Evaluation
				Misfire recognition (activated, blocked)	activated	---
				Misfire total	0	=> Page 35
				Engine load	15.0...100.0 %	---
				Engine speed	810...5700 rpm	---

Evaluating display group 14, display zone 3 - Total number of misfires

Appears on display	Possible fault cause	Fault elimination
More than 0	- Spark plug defective - Spark plug connector defective - Ignition coil defective - Ignition coil output stage defective	- Removing and installing parts of the ignition system => Page 144
	- Injector defective	- Check injectors => Page 96

Only engine codes ANW, AUD

Display group 15 -Ignition- Misfire recognition Cyl. 1 to Cyl. 3		
▪ Whilst driving		
Read measured value block 15	⇒	◂ Indicated on display

Protected by copyright. Copying for private or commercial purposes, in part or in whole, is not permitted unless authorised by Volkswagen AG. Volkswagen AG does not guarantee or accept any liability with respect to the correctness of information in this document. Copyright by Volkswagen AG.
satelettronica

xxx	xxx	xxx	Text			
1	2	3	4	◂ Display zones	Specification	Evaluation
				Misfire recognition (activated, blocked)	activated	---
			Misfire Cyl. 3		0	=> Page 36
		Misfire Cyl. 2			0	=> Page 36
	Misfire Cyl. 1				0	=> Page 36

Only engine codes ANW, AUD

Display group 16 -Ignition- misfire recognition Cyl. 4						
▪ Whilst driving						
Read measured value block 16			⇒	◂ Indicated on display		
xxx	---	---	Text			
1	2	3	4	◂ Display zones	Specification	Evaluation
				Misfire recognition (activated, blocked)	activated	---
	Misfire Cyl. 4				0	=> Page 36

Evaluating display group 15 display zones 1 to 3 or display group 16 display zone 1 - Misfire recognition Cyl. 1 to Cyl. 4

Appears on display	Possible fault cause	Fault elimination
More than 0	- Spark plug defective - Spark plug connector defective - Ignition coil defective - Ignition coil output stage defective	- Removing and installing parts of the ignition system => Page 144
	- Injector defective	- Check injectors => Page 96

Display group 20 -Ignition- Knock control Cyl. 1 to Cyl. 4						
▪ Whilst driving						
Read measured value block 20			⇒	◂ Indicated on display		
xx.x °CA	xx.x °CA	xx.x °CA	xx.x °CA			
1	2	3	4	◂ Display zones	Specification	Evaluation
				Cyl. No. 4 retardation of ignition by knock control	0.0...12.0 °CA	=> Page 37
			Cyl. No. 3 retardation of ignition by knock control		0.0...12.0 °CA	=> Page 37
		Cyl. No. 2 retardation of ignition by knock control			0.0...12.0 °CA	=> Page 37
	Cyl. No. 1 retardation of ignition by knock control				0.0...12.0 °CA	=> Page 37

Note on display zones 1 to 4:

Display value should be 0.0 °CA at idling speed.

Copyright by Volkswagen AG. Volkswagen AG does not guarantee or accept any liability with respect to the correctness of information in this document. Copyright by Volkswagen AG. Protected by copyright. Copying for private or commercial purposes, in part or in whole, is not permitted unless authorised by Volkswagen AG.
satelettronica

Evaluating display group 20, display zones 1 to 4 - Cyl. 1 to Cyl. 4 ignition retardation

Appears on display	Possible fault cause	Fault elimination
All cylinders greater than 12.0 °CA	- Knock sensor defective	- Check knock sensor => Page 148
	- Connector corroded	
	- Knock sensor incorrectly tightened	- Loosen knock sensor and tighten to 20 Nm
	- Ancillary components on engine loose	- Tighten ancillary components
	- Poor fuel quality	- Change type of fuel
One cylinder deviates greatly from the others	- Connector corroded	- Check knock sensor => Page 148
	- Engine damaged	- Check compression pressures: => Repair group 15; Removing and installing cylinder head; Checking compression pressure Checking compression pressure
	- Ancillary components on engine loose	- Tighten ancillary components

Display group 22 -Ignition- Cyl. 1 and Cyl. 2 knock control						
▪ Whilst driving						
Read measured value block 22			⇒	◂ Indicated on display		
xxxx rpm	x.xx %	xx.x °CA	xx.x °CA			
1	2	3	4	◂ Display zones	Specification	Evaluation
				Cyl. No. 2 retardation of ignition timing by knock control	0.0...12.0 °CA	=> Page 38
			Cyl. No. 1 retardation of ignition timing by knock control		0.0...12.0 °CA	=> Page 38
		Engine load			15.0...100.0 %	---
	Engine speed				810...5700 rpm	---

Note on display zones 3 and 4:

The display value should be 0.0 °CA at idling speed.

Display group 23 -Ignition- Cyl. 3 and Cyl. 4 knock control						
▪ Whilst driving						
Read measured value block 23			⇒	◂ Indicated on display		
xxxx rpm	x.xx %	xx.x °CA	xx.x °CA			
1	2	3	4	◂ Display zones	Specification	Evaluation
				Cyl. No. 4 retardation of ignition by knock control	0.0...12.0 °CA	=> Page 38
			Cyl. No. 3 retardation of ignition by knock control		0.0...12.0 °CA	=> Page 38
		Engine load			15.0...100.0 %	---
	Engine speed				810...5700 rpm	---

satelettronica

Note on display zones 3 and 4:

The display value should be 0.0 °CA at idling speed.

Evaluating display groups 22/23, display zones 3 and 4 - Retardation of ignition

Appears on display	Possible fault cause	Fault elimination
All cylinders greater than 12.0 °CA	- Knock sensor defective	- Check knock sensor => Page 148
	- Connector corroded	
	- Knock sensor incorrectly tightened	- Loosen knock sensor and tighten to 20 Nm
	- Ancillary components on engine loose	- Tighten ancillary components
	- Poor fuel quality	- Change type of fuel
One cylinder deviates greatly from the others	- Connector corroded	- Check knock sensor => Page 148
	- Engine damaged	- Check compression pressures: => Repair group 15; Removing and installing cylinder head; Checking compression pressure Checking compression pressure
	- Ancillary components on engine loose	- Tighten ancillary components

Display group 28 -Ignition- knock control						
▪ Whilst driving ▪ Control unit in mode 04-Basic settings						
Read measured value block 28 ⇒				◂ Indicated on display		
xxxx rpm	xx.x %	xxx.x °C	Text			
1	2	3	4	◂ Display zones	Specification	Evaluation
				Knock sensor test result (Test On / Test OFF / Sys. OK. / Sys. n.OK.	Sys. OK.	---
				Coolant temperature	80.0...110.0 °C	=> Page 33
		Engine load			15.0...100.0 %	---
	Engine speed				2200...5700 rpm	---

10 - Evaluating measured value blocks, display grps 30...49, 99 -Lambda regulation-

10.1 - Evaluating measured value blocks, display grps 30...49, 99 -Lambda regulation-

Display group 30 -Lambda regulation-						
▪ Engine running at idling speed						
Read measured value block 30 ⇒				◂ Indicated on display		
xxx	xxx	---	---			
1	2	3	4	◂ Display zones	Specification	Evaluation

Protected by copyright. Copyright by Volkswagen AG. Volkswagen AG does not guarantee or accept any liability with respect to the correctness of information in this document. Copyright by Volkswagen AG. Reproduced or published for commercial purposes, in part or in whole, is not permitted unless authorised by Volkswagen AG.
satelettronica

	Status of Lambda regulation after catalyst1) ▪ Catalyst temperature at least 400.0 °C ▪ (=>display group 34, display zone 2)	111	=> Page 39
	Status of Lambda regulation before catalyst	111	=> Page 39

1) Only engines conforming to D4 standard (engine code ANW)

Notes on display zones 1 and 2:

- The first position in 3-digit number block fluctuates between 0 and 1 (Lambda probe heating off and on).
- Depending on status of Lambda regulation 0 or 1 is displayed alternately in 3-digit number block.
- The bits in display zones 1 and 2 are set to 1, when the catalyst temperature has exceeded 400.0 °C (=> display group 34, display zone 2).

Significance of figures in 3-digit number block, display zones 1 and 2 - status of Lambda regulation before and after catalyst

Significance if display = 1			
1	2	3	Significance
		1	Lambda regulation active
	1		Lambda probe operationally ready
1			Lambda probe heating on

Display group 32 -Lambda regulation- Lambda learnt values before catalyst						
▪ Engine running at idling speed Read measured value block 32			⇒	◂ Indicated on display		
xx.x %	xx.x %	---	---			
1	2	3	4	◂ Display zones	Specification	Evaluation
		Lambda learnt value at part load (multiplicative) before catalyst			-10.0...10.0 %	=> Page 40
	Lambda learnt value at idling speed (additive) before catalyst				-10.0...10.0 %	=> Page 40

Notes on display zones 1 and 2:

Low values indicate that the engine is running too rich and therefore the Lambda regulation is leaning the mixture.

- High values indicate that the engine is running too lean and therefore the Lambda regulation enriches the mixture.
- If there is no voltage supply to the control unit all the values learnt will be cancelled.
- add = additive - The effects of the fault (e.g. unmetered air) will reduce as the engine speed increases. The injection period will be modified by a fixed amount for additive learnt values. This amount is not dependent upon the basic injection period.
- mul = multiplicative - The effects of the fault (e.g. faulty injector) will increase as the engine speed increases. A multiplicative learnt value is a proportional change to the injection period. This change is dependent on the basic injection period.

Initiating learning process: Control unit in mode 04, Basic settings

- Learning conditions for idling: Idling, coolant temperature min. 75 °C, intake air temperature max. 90 °C
- Learning conditions for part load: coolant temperature min. 75 °C, intake air temperature max. 90 °C

Protected by copyright. Copying for private or commercial purposes, in part or in whole, is not permitted unless authorised by Volkswagen AG. Volkswagen AG does not guarantee or accept any liability with respect to the correctness of information in this document. Copyright by Volkswagen AG.
satelettronica

Evaluating display group 32, display zones 1 and 2 - Lambda learnt values before catalyst

Appears on display	Possible fault cause	Fault elimination
Low Lambda learnt values	- Low learnt values at idling but with normal learnt values at part throttle: possible oil dilution (high level of fuel in oil)	- Disappears after motorway drive or oil change
	- Injector leaking	- Check injector =>Page 96
	- Fuel pressure too high	- Check fuel pressure regulator and holding pressure => Page 102
	- Tank venting valve for activated charcoal filter permanently open	- Check tank venting valve => Page 19 , final control diagnosis
	- Lambda probe heating defective or Lambda probe soiled	- Check Lambda probe heating before catalyst =>Page 74

Appears on display	Possible fault cause	Fault elimination
High Lambda learnt values	- High learnt values at idling speed, not so high learnt values at part throttle: possible unmetered air in area of intake manifold	- Check intake air system for leaks =>Page 106
	- Injector blocked	- Check injectors =>Page 96
	- Fuel pressure too low	- Check fuel pressure regulator and holding pressure => Page 102
	- Unmetered air at exhaust manifold gasket	
	- Lambda probe heating defective or Lambda probe soiled	- Check Lambda probe heating before catalyst =>Page 74

Display group 33 -Lambda regulation- Lambda regulation values before catalyst						
▪ Engine running at idling speed						
Read measured value block 33			⇒	◂ Indicated on display		
xx.x %	x.xxx V	---	---			
1	2	3	4	◂ Display zones	Specification	Evaluation
		Lambda probe voltage before catalyst			1.000...2.000 V	---
	Lambda regulator before catalyst				-10.0...10.0 %	=> Page 41

Notes on display zone 1:

- The display must fluctuate around 0.0 %. If constant 0.0 % is displayed, the Lambda regulation has switched from regulation to control, because there is a fault in the Lambda regulation. Interrogate fault memory => Page 7 .

Copyright by Volkswagen AG. Volkswagen AG does not guarantee or accept any liability with respect to the correctness of information in this document. Copyright by Volkswagen AG. Reproduction, in whole or in part, is not permitted without the express authorised by Volkswagen AG. Copying or publication and distribution of material protected by copyright.
satelettronica

Evaluating display group 33, display zone 1 - Lambda regulator before catalyst

Appears on display	Possible fault cause	Fault elimination
Outside tolerance range	- Minus range: Mixture too rich, Lambda control weakens mixture - Positive range: Mixture too lean, Lambda control enriches mixture	- Wait 30 seconds until the display has stabilised
	- Unmetered air	- Check intake system for leaks => Page 106
	- Injector defective	- Check injectors =>Page 96
	- Lambda learnt value on limit	- Check Lambda learnt value in display group 32

Only engine codes ANW, AUD

Display group 34 -Lambda regulation- Lambda probe diagnosis before catalyst (checking ageing via amplitude duration monitoring)						
▪ Control unit in mode 04-Basic setting - Depress brake pedal ▪ Vehicle stationary, engine runs at increased idling speed						
Read measured value block 34 ⇒				◂ Indicated on display		
xxxx rpm	xxx.x °C	x.xx	Text	◂ Display zones	Specification	Evaluation
1	2	3	4	Result of Lambda probe before catalyst ageing check (Test OFF / test ON / B1-P1 OK / B1-P1 n.OK)	B1-P1 OK	---
				Amplitude duration Lambda probe before catalyst	0.7... 2.00	---
		Catalyst temperature			min. 400.0 °C	---
	Engine speed				1100...1300 rpm	---

Note on display zone 2:

Value calculated from engine speed and engine load.

Only engine codes ANW, AUD

Display group 36 -Lambda regulation- Operational readiness of probe after catalyst						
▪ Control unit in mode 04-Basic setting - Depress brake pedal ▪ Vehicle stationary, engine runs at increased idling speed						
Read measured value block 36 ⇒				◂ Indicated on display		
x.xxx V	xxx.x °C	x.xx	Text	◂ Display zones	Specification	Evaluation
1	2	3	4	Check Lambda probe after catalyst (Test ON / test OFF / B1-P2 OK. / B1-P2 n.OK)	B1-P2 OK	---
				Specification Lambda probe after catalyst	---	---
		Catalyst temperature			min. 400.0 °C	---
	Lambda probe voltage after catalyst				0.000...1.000 V	=> Page 42

satelettronica

Evaluating display group 36, display zone 1 - Lambda probe voltage, Lambda probe after catalyst

Appears on display	Possible fault cause	Fault elimination
Constant 1.085 V	- Short to positive via: - Lambda probe, probe wiring, earth wiring, engine control unit	- Check Lambda probe 2 basic voltage => Page 119
Constant between 0.400...0.500 V	- Open circuit via: - Lambda probe, probe wiring, earth wiring, engine control unit	
Constant 0.000 V	- Short to earth via: - Lambda probe, probe wiring, earth wiring, engine control unit	

Display group 37 -Lambda regulation- Lambda probes

- Vehicle stationary, engine running at increased idling speed
- Control unit in mode 04-Basic settings

Read measured value block 37 ⇒ ◂ Indicated on display

xxx %	x.xxx V	xxx.xxx	Text	◂ Display zones	Specification	Evaluation
1	2	3	4			
				Test of Lambda probes (Test ON / OFF / Syst. OK / n.OK)	Syst. OK	
			Not for Service		---	---
		Lambda probe voltage Lambda probe after catalyst			0.000...1.000 V	=> Page 42
	Engine load				15.0...30.0 %	=> Page 35

Display group 41 -Lambda regulation- Lambda probe heating

- Engine running at idling speed

Read measured value block 41 ⇒ ◂ Indicated on display

---	Text	---	Text	◂ Display zones	Specification	Evaluation
1	2	3	4			
				Lambda probe heating after catalyst1)	Htg.aC.ON Htg.aC.OFF	---
		Lambda probe heating before catalyst			Htg.bC.ON Htg.bC.OFF	---

1) Only engines conforming to D4 standard (engine code ANW)

Note:

The Lambda probe heating may be switched ON or OFF depending on the operating conditions of the engine, therefore the display in display zone 2 or 4 may show "Htg.b(a)C.ON" or alternating from "Htg.b(a)C.ON" to Htg.b(a)C.OFF".

Only engine codes ANW, AUD

Display group 46 -Lambda regulation- Catalyst diagnosis (conversion test)

- Control unit in mode 04-Basic setting
- Depress brake pedal

Protected by copyright. Copyright by Volkswagen AG.
Volkswagen AG does not guarantee or accept any liability with respect to the correctness of information in this document. Copyright by Volkswagen AG.
Reproduction, in part or in whole, for commercial purposes, in part or in whole, is not permitted unless authorised by Volkswagen AG.
satelettronica

▪ Vehicle stationary, engine runs at increased idling speed						
Read measured value block 46 ⇒				◂ Indicated on display		
xxxx rpm	xxx.x °C	x.xx	Text			
1	2	3	4	◂ Display zones	Specification	Evaluation
				Result of catalyst conversion test (Test OFF / test ON / Cat B1 OK/Cat B1 n.OK)	Cat B1 OK	---
				Amplitude ratio	0.00...0.50	---
				Catalyst temperature	min. 400.0 °C	---
				Engine speed	1100...1300 rpm	---

Display group 99 -Lambda regulation- Lambda regulation operating condition						
▪ Engine running at idling speed						
▪ Control unit in mode 04-Basic setting, Lambda regulation off						
▪ Control unit in mode 08-Read measured value block, Lambda regulation on						
Read measured value block 99 ⇒				◂ Indicated on display		
xxxx rpm	xxx.x °C	xx.x %	Text			
1	2	3	4	◂ Display zones	Specification	Evaluation
				Lambda regulation operating mode	λ-Reg. OFF or λ-Reg. ON	---
				Lambda regulator before catalyst	-10.0...10.0 %	=> Page 41
				Coolant temperature	80.0...110.0 °C	=> Page 33
				Engine speed (idling speed)	810...900 rpm	=> Page 31

Notes on display zone 4:

- For a defined fault finding the Lambda regulation is switched off when selecting display group 99 under "Basic setting" or switched on under "Read measured value block".
  When the function 04 "Basic setting" is exited the Lambda regulation is automatically active again.
- It is possible to switch between the function 04 "Basic setting" and the function 08 "Read measured value block" by pressing the keys 4 and 8 on V.A.G 1551/1552.

11 - Evaluating measured value blocks, display groups 50...69 -Speed regulation-

11.1 - Evaluating measured value blocks, display groups 50...69 -Speed regulation-

Display group 50 -Speed regulation- Operating condition						
▪ Engine running at idling speed						
Read measured value block 50 ⇒				◂ Indicated on display		
xxxx rpm	xxxx rpm	Text	Text			
1	2	3	4	◂ Display zones	Specification	Evaluation
				Air conditioner compressor operating mode ON/OFF	Compr. ON or Compr. OFF	---
				Air conditioner operating mode	A/C-High or A/C-Low	---
				Engine speed (idling speed specification)	700 rpm	---
				Engine speed (idling speed)	810...900 rpm	=> Page 31

satelettronica

Note on display zone 2:

The value displayed is the specified figure calculated by the control unit.

Notes on display zone 3:

- A/C-High = Air conditioner demands too high a heating or cooling output
  A/C-Low = Air conditioner not switched on.

Notes on display zone 4:

- "Compr. OFF" is always displayed on vehicles without air conditioner.
- Checking signal from and to air conditioner compressor =>Page 132

Display group 54 -Speed regulation-

- Whilst driving

Read measured value block 54 ⇒ Indicated on display

xxxx rpm	Text	xxx.x %	xxx.x %			
1	2	3	4	Display zones	Specification	Evaluation
			4	Throttle valve angle (Potentiometer 1 -G187)	0.0...100.0%	---
		3		Accelerator pedal position sender 1 -G79	0.0...100.0%	---
	2			Operating mode: Idling, part throttle, enrichment, overrun, full throttle	---	---
1				Engine speed	810...5700 rpm	---

Display group 55 -Speed regulation- Idling stabilisation

- Engine running at idling speed

Read measured value block 55 ⇒ Indicated on display

xxxx rpm	xx.x %	xx.x %	xxxxx			
1	2	3	4	Display zones	Specification	Evaluation
			4	Operating mode	xxxxx	=> Page 44
		3		Idling speed regulation learnt value: Air conditioner on (A/C-High) Air conditioner off (A/C-Low)	-8.0...8.0 % -5.0...5.0 %	---
	2			Idling speed regulator	-4.3...12.2 %	---
1				Engine speed (idling speed)	810...900 rpm	=> Page 31

Note on display zone 3:

Displayed is the amount that the idling speed stabilisation has moved away from the prescribed average. For a new engine the values lie in the positive range, because of the higher friction and in the negative range with an engine that has run-in.

Significance of figures in 5-digit number block, display zone 4 - operating modes

Significance if display = 1					
1	2	3	4	5	Significance
				1	Air conditioner compressor switched on
			x		Not relevant
		1			Air conditioning system switched on
	x				Not relevant

Protected by copyright. Copying for private or commercial purposes, in part or in whole, is not permitted unless authorised by Volkswagen AG. Volkswagen AG does not guarantee or accept any liability with respect to the correctness of information in this document. Copyright by Volkswagen AG.
satelettronica

Significance if display = 1					
x					Not relevant

Display group 56 -Speed regulation- Idling speed stabilisation						
▪ Engine running at idling speed						
Read measured value block 56			⇒	◂ Indicated on display		
xxxx rpm	xxxx rpm	xx.x %	xxxxx			
1	2	3	4	◂ Display zones	Specification	Evaluation
				Operating mode	xxxxx	=> Page 44
			Idling speed regulator		-4.3...12.2 %	---
		Engine speed (idling speed specification)			700 rpm	---
	Engine speed (idling speed)				810...900 rpm	=> Page 31

Note on display zone 2:

The value displayed is the specified figure calculated by the control unit.

Display group 60 -Speed regulation- Adaption EPC system 1)						
▪ Ignition on, engine not running						
▪ Control unit in mode 04 basic setting						
Read measured value block 60			⇒	◂ Indicated on display		
xx %	xx %	x	Text			
1	2	3	4	◂ Display zones	Specification	Evaluation
				Adaption condition (ADP runs / ADP OK / ADP ERROR)	ADP OK	---
			Learning step counter		0...9	---
		Throttle valve angle (Potentiometer 2 -G188)			90...10 %	---
	Throttle valve angle (Potentiometer 1 -G187)				10...90 %	---

1) Adapting engine control unit to throttle valve control part => Page 127 .

Note on display group 60:

- Matching the throttle valve control part is performed with ignition switched on.
- Engine control unit is adapted to throttle valve control unit when selecting display group 60 under function 04 "Basic setting". This adaption must always be carried out when another throttle valve control part (or another complete engine) or another engine control unit is fitted.
- If the voltage supply is interrupted (battery disconnected) the adaption (matching) must be carried out again => Page 125 Procedure after voltage supply open circuit.
- During adaption the counter counts upwards from 0 to 9 in display zone 3.

Display group 61 -Speed regulation- Electronic accelerator system						
▪ Whilst driving						
Read measured value block 61			⇒	◂ Indicated on display		
xxxx rpm	---	xxx.x %	xxxxx			
1	2	3	4	◂ Display zones	Specification	Evaluation
				Operating mode	xxxxx	=> Page 44
			Throttle valve angle (Potentiometer 1 -G187)		0.0...100.0%	---

Volkswagen AG does not guarantee or accept any liability with respect to the correctness of information in this document. Copyright by Volkswagen AG. Protected by copyright. Copying for private or commercial purposes, in part or in whole, is not permitted unless authorised by Volkswagen AG.
satelettronica

Engine speed	810...5700 rpm	---

Display group 62 -Speed regulation- Electronic accelerator system						
▪ Ignition on, engine not running						
Read measured value block 62 ⇒				◂ Indicated on display		
xx %	xx %	xx %	xx %			
1	2	3	4	◂ Display zones	Specification	Evaluation
				Accelerator pedal position sender 2 -G185	4...49 %	---
				Accelerator pedal position sender 1 -G79	12...97 %	---
				Throttle valve angle (potentiometer 2 -G188)	90...10 %	---
				Throttle valve angle (potentiometer 1 -G187)	10...90 %	---

12 - Evaluating measured value blocks, display groups 70...79 -Reducing emissions-

12.1 - Evaluating measured value blocks, display groups 70...79 -Reducing emissions-

Only engine codes ANW, AUD

Display group 70 -Reducing emissions- Activated charcoal filter system diagnosis (tank breathing system)						
▪ Engine running at idling speed						
▪ Coolant temperature at least 80.0 °C						
▪ Control unit in mode 04-Basic settings						
Read measured value block 70 ⇒				◂ Indicated on display		
xx.x %	xx.x %	---	Text			
1	2	3	4	◂ Display zones	Specification	Evaluation
				Result of activated charcoal filter diagnosis (Test OFF / test ON / TVV OK / TVV n.OK)	TVV OK	---
		Lambda regulator deviation during TVV diagnosis			-10.0...10.0 %	---
	Tank venting valve -N80 for activated charcoal filter system duty cycle				0.0...99.0 %	---

Note:

TVV means tank venting valve. The diagnosis can only be initiated once per engine start.

Notes on display zone 2:

- Lambda regulator deviation in negative range: Activated charcoal filter full
- Lambda regulator deviation in positive range: Activated charcoal filter empty

satelettronica

13 - Evaluating measured value blocks, display group 100 -Readiness code-

13.1 - Evaluating measured value blocks, display group 100 -Readiness code-

Only engine codes ANW, AUD

Display group 100 -Readiness code-						
▪ Engine running at idling speed Read measured value block 100			⇒	◂ Indicated on display		
xxxxxxxx	xxx.x °C	xxx.x s	xxxxxxxx			
1	2	3	4	◂ Display zones	Specification	Evaluation
				Diagnosis status	---	---
			Period since last engine start		---	---
		Coolant temperature			80.0...110.0 °C	=> Page 33
	Readiness code				00000000	=> Page 47

Significance of figures in 8-digit number block, display zone 1 - Readiness code

The readiness code is generated only when all display zones show 0								
1	2	3	4	5	6	7	8	Diagnostic function
							0	Catalyst
						0		Catalyst heating (currently no diagnosis/always "0")
					0			Activated charcoal filter system (tank venting system)
				0				Secondary air system (not fitted/always "0")
			0					Air conditioner (currently no diagnosis/always "0")
		0						Lambda probes
	0							Lambda probe heating
0								Exhaust gas recirculation (not fitted/always "0")

Protected by copyright. Copying for private or commercial purposes, in part or in whole, is not permitted unless authorised by Volkswagen AG. Volkswagen AG does not guarantee or accept any liability with respect to the correctness of information in this document. Copyright by Volkswagen AG.
satelettronica

24 - Mixture preparation, Injection

1 - Servicing injection system

1.1 - Servicing injection system

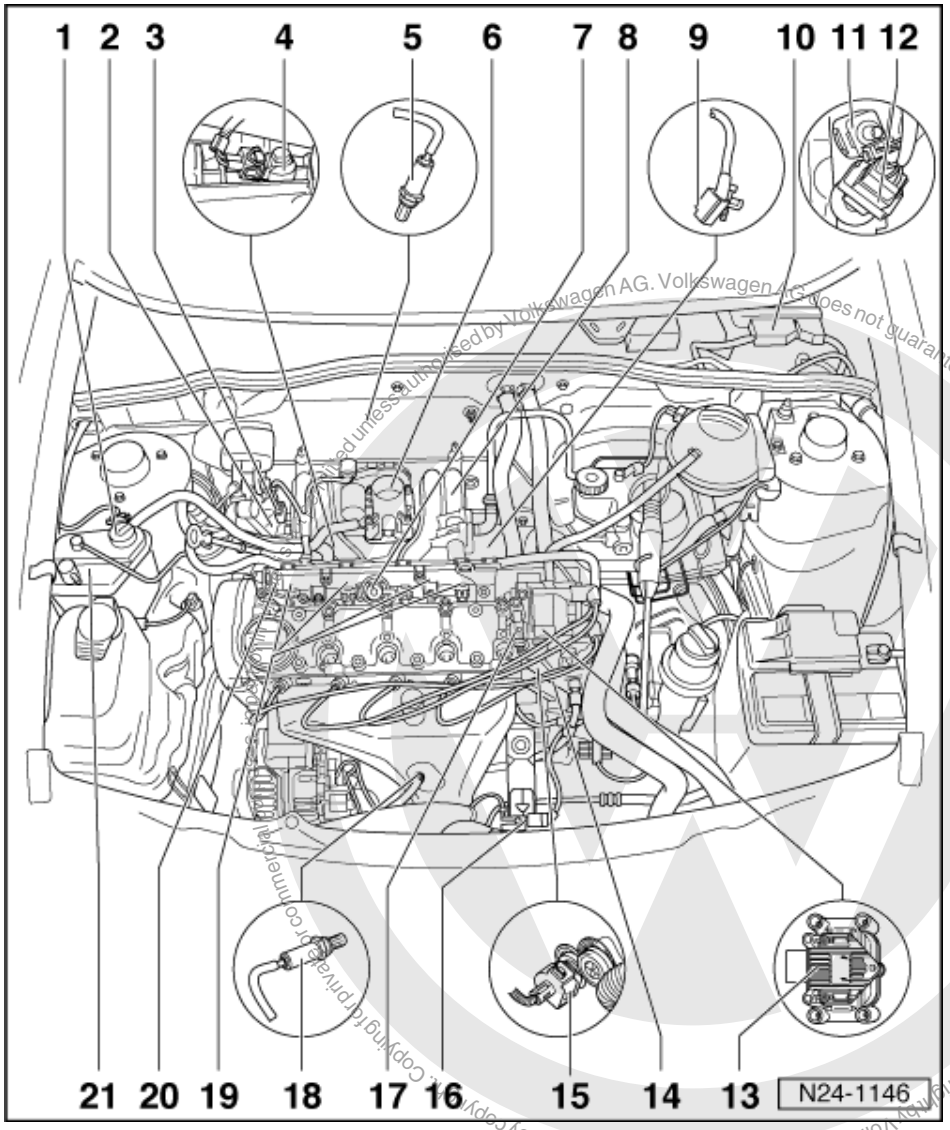

1.2 - Fitting locations overview

Component A is not shown on the illustration.

A - Accelerator pedal position sender (G79)

- In footwell on accelerator pedal:

satelettronica

=> Repair group 20; Removing and installing parts of fuel supply system; Servicing accelerator mechanism
Removing and installing parts of fuel supply system Servicing accelerator mechanism

1 Tank venting valve (N80)*/**

=> Repair group 20; Activated charcoal filter system Activated charcoal filter system

2 Connector
- Engines fulfilling D4 standard only
- For Lambda probe 2 after catalyst (G130) and Lambda probe heating (Z29)
- Black, 4-pin
- Contacts 3 and 4 gold plated

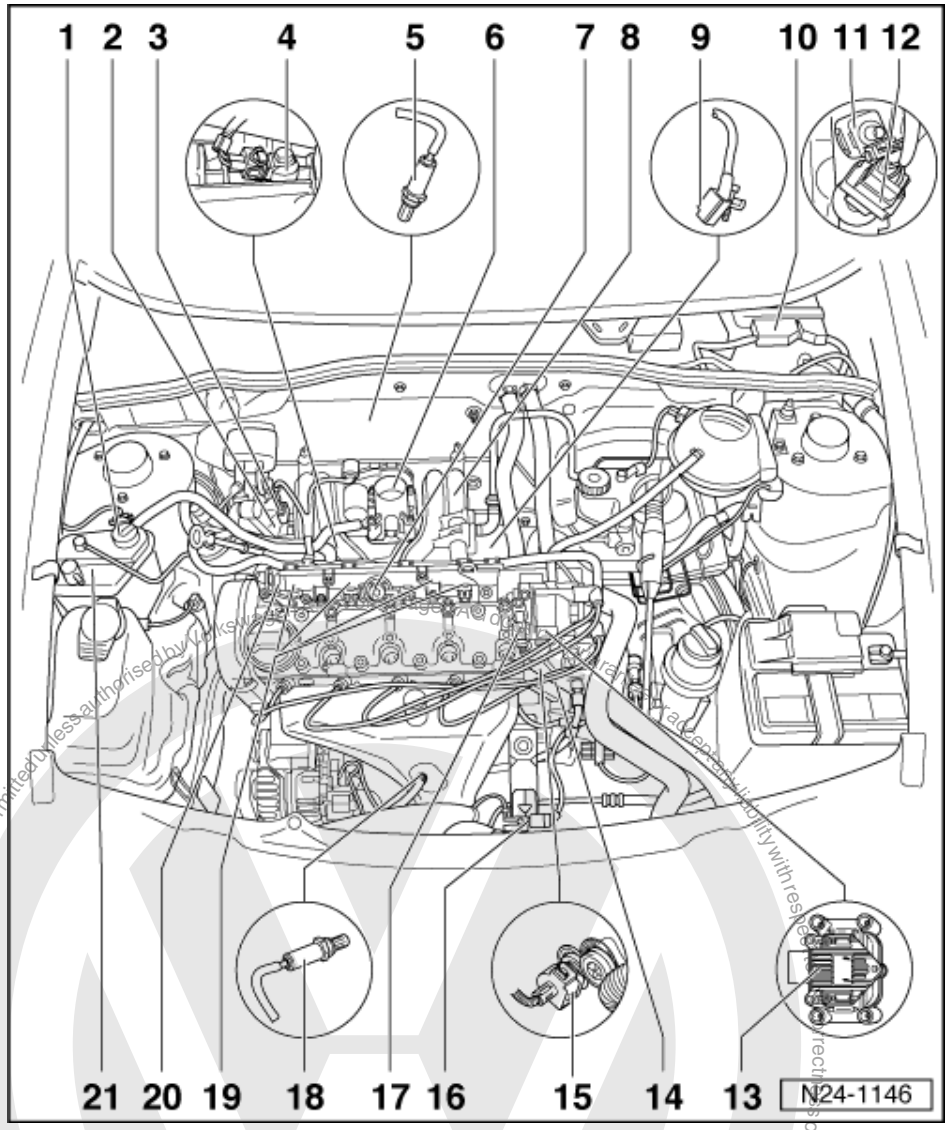

3 Intake manifold pressure sender (G71)* with intake air temperature sender (G42)*

4 Knock sensor 1 (G61)*

5 Lambda probe 2 after catalyst (G130)*, 50 Nm
- Engines fulfilling D4 standard only

6 Throttle valve control part (J338)*

7 Fuel pressure regulator

8 Intake manifold

9 Engine speed sender (G28)*

10 Motronic control unit (J220)*

Protected by copyright. Copying for private or commercial purposes, in part or in whole, is not permitted unless authorised by Volkswagen AG. Copyright by Volkswagen AG. No liability with respect to the correctness of information in this document.
satelettronica

11 Brake pedal switch (F47)

- In footwell on brake pedal
- Checking => Page 133

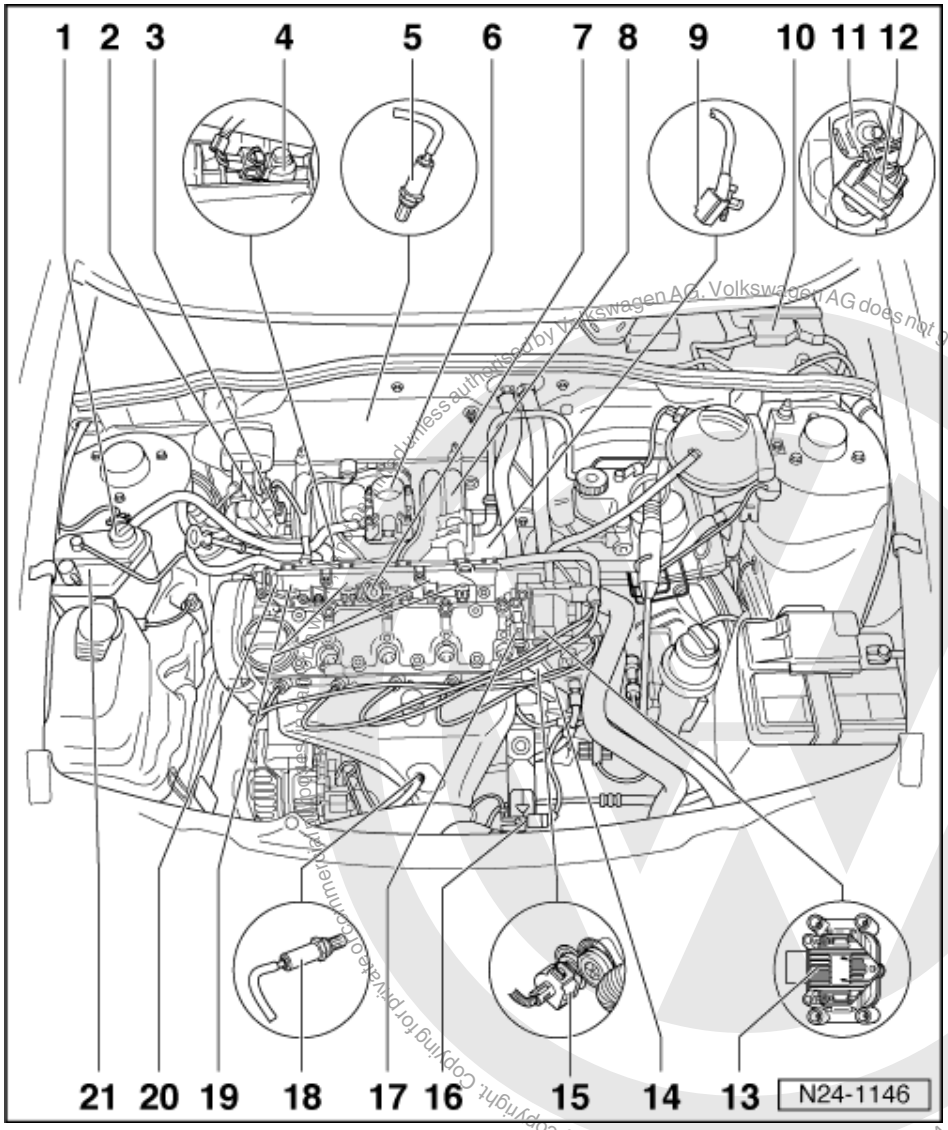

12 Brake light switch (F)

- In footwell on brake pedal
- Checking => Page 133

13 Ignition transformer (N152)*

- With ignition cable identification, do not interchange
- => Page 139 , item 2

14 3 pin connector

- Black
- For engine speed sender (G28)

15 Coolant temperature sender (G62)*

- With coolant temperature gauge sender (G2)

Protected by copyright. Copying for private or commercial purposes, in part or in whole, is not permitted unless authorised by Volkswagen AG. Volkswagen AG does not guarantee or accept any liability with respect to the correctness of information in this document. Copyright by Volkswagen AG.
satelettronica

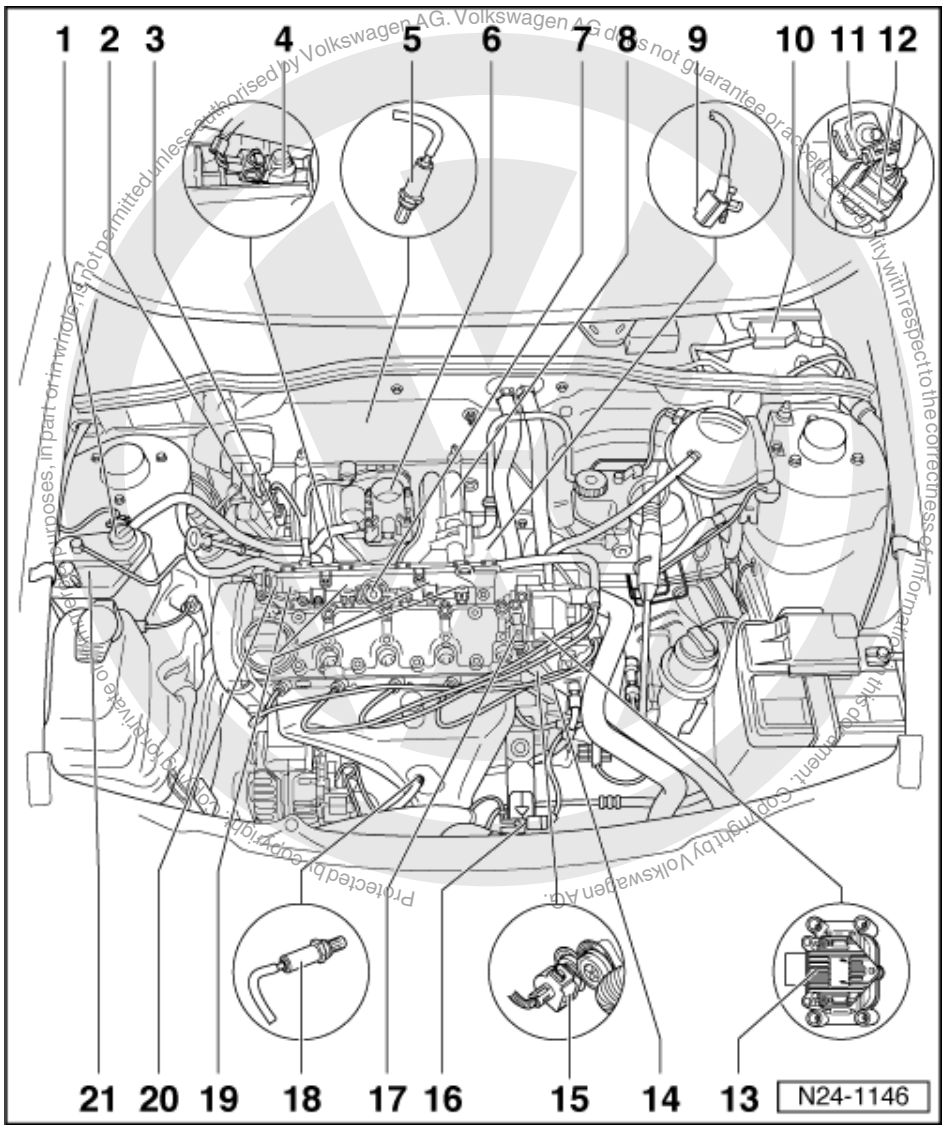

16 Connector

- For Lambda probe 1 before catalyst (G39) and Lambda probe heating (Z19)
  Engine code AKK
- Black, 4-pin
- Connector contacts 3 and 4 are gold-plated
  Engine codes ANW, AUD
- Black, 6-pin
- Contacts gold plated

17 Hall sender (G40)*

- => Page 141 , item 8

18 Lambda probe 1 before catalyst (G39)*, 50Nm

19 Injectors (N30...N33)*

20 Fuel rail

21 Activated charcoal filter

=> Repair group 20; Activated charcoal filter system Activated charcoal filter system

satelettronica

1.3 - General notes on injection

Servicing ignition part:

=> Repair group 28

- The engine control unit is equipped with self-diagnosis. Before carrying out repairs and fault finding the fault memory must be interrogated. Also the vacuum hoses and connections must be checked (unmetered air).
- Fuel hoses in engine compartment must only be secured with spring type clips. The use of clamp or screw type clips is not permissible.
- Disconnecting and connecting the battery must only be done with the ignition switched off, otherwise the engine control unit could be damaged.
- Components marked with * are checked via the self diagnosis => Page 7 , interrogating and erasing fault memory.
- Components marked with ** can be checked with the final control diagnosis => Page 19 .
- For trouble-free operation of the electrical components, a voltage of at least 11.5 V is necessary.
- Do not use sealants containing silicone. Particles of silicone drawn into the engine, will not be burnt in the engine and damage the Lambda probe.
- If the engine starts, runs for a short period and then stops, after fault finding, repairs or component tests, then the fault may lie with the immobilizer which is blocking the engine control unit. The fault memory must be interrogated and if necessary the control unit matched => Page 129 .
- During some checks it is possible that the control unit will recognise and store a fault. Therefore after completing all checks and repairs the fault memory must be interrogated and if necessary erased. => Page 7 , interrogating and erasing fault memory
- Vehicles with an airbag are fitted with a crash/fuel shut-off. It reduces the risk of a vehicle burning in the event of a crash in that the fuel pump is switched off by the fuel pump relay. At the same time this device improves the starting of the engine because as soon as the door is opened the fuel pump is activated to build-up pressure in the fuel system.

Safety precautions =>Page 72

Rules for cleanliness => Page 73

Technical data => Page 73

Checking intake system for leaks (unmetered air) => Page 106 .

Checking engine operating mode => Page 121

Protected by copyright. Copying for private or commercial purposes, in part or in whole, is not permitted unless authorised by Volkswagen AG. Volkswagen AG does not guarantee or accept any liability with respect to the correctness of information in this document. Copyright by Volkswagen AG.
satelettronica

1.4 - Removing and installing parts of the injection system

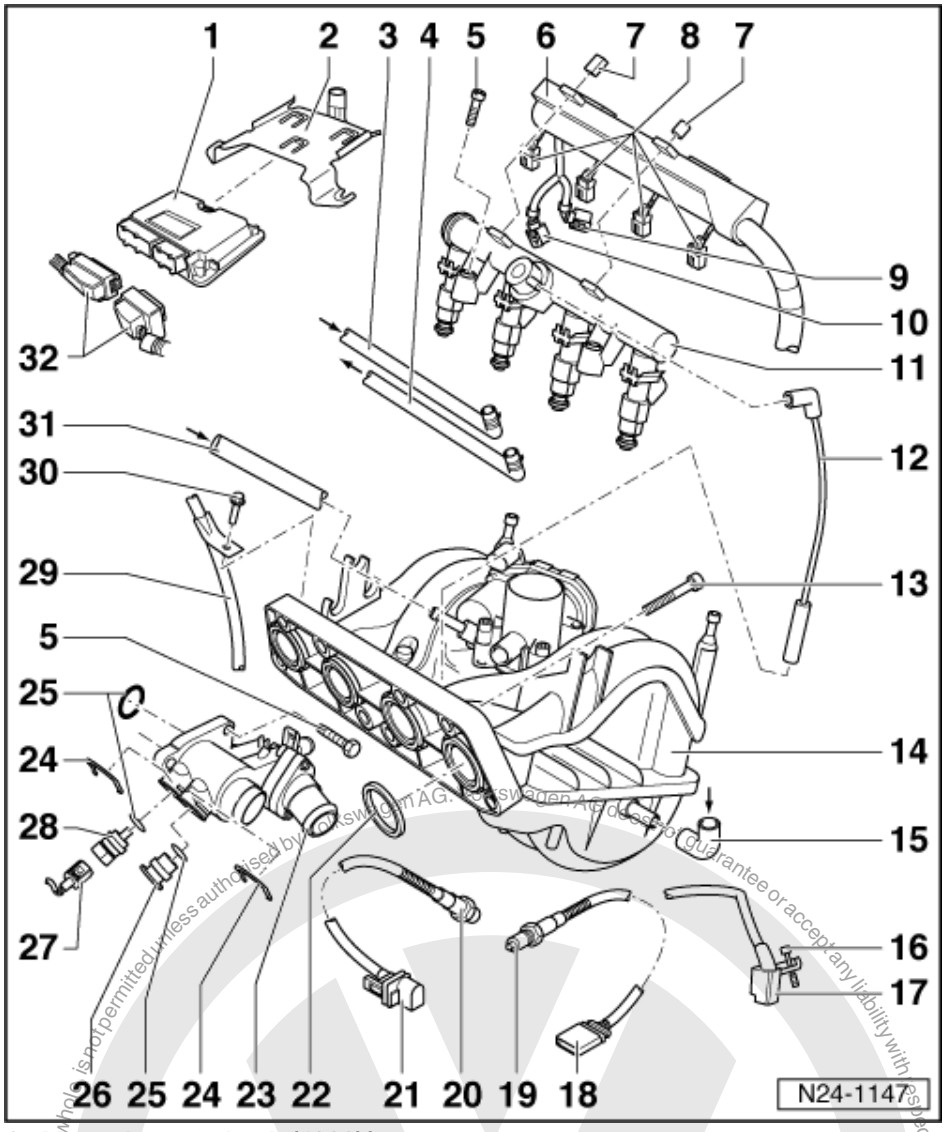

1 Motronic control unit (J220)*

- Fitting location => Page 48 , engine compartment overview
- For injection system, Lambda regulation, activated charcoal filter tank venting valve, knock control, speed governing, ignition and self-diagnosis
- Checking voltage supply => Page 123
- Procedure after voltage supply open circuit => Page 125
- Renew => Page 125
- If replaced carry out basic setting => Page 127
- On replacement, the control unit must be matched to the electronic immobilizer => Page 129

Protected by copyright. Copying for private or commercial purposes, in part or whole, is not permitted unless authorised by Volkswagen AG. Volkswagen AG does not guarantee or accept any liability with respect to the correctness of information in this document. Copyright by Volkswagen AG.
satelettronica

Copyright by Volkswagen AG. Volkswagen AG does not guarantee or accept any liability with respect to the correctness of information in this document. Reproduction, distribution and commercial use is not permitted without the express authorisation of Volkswagen AG.

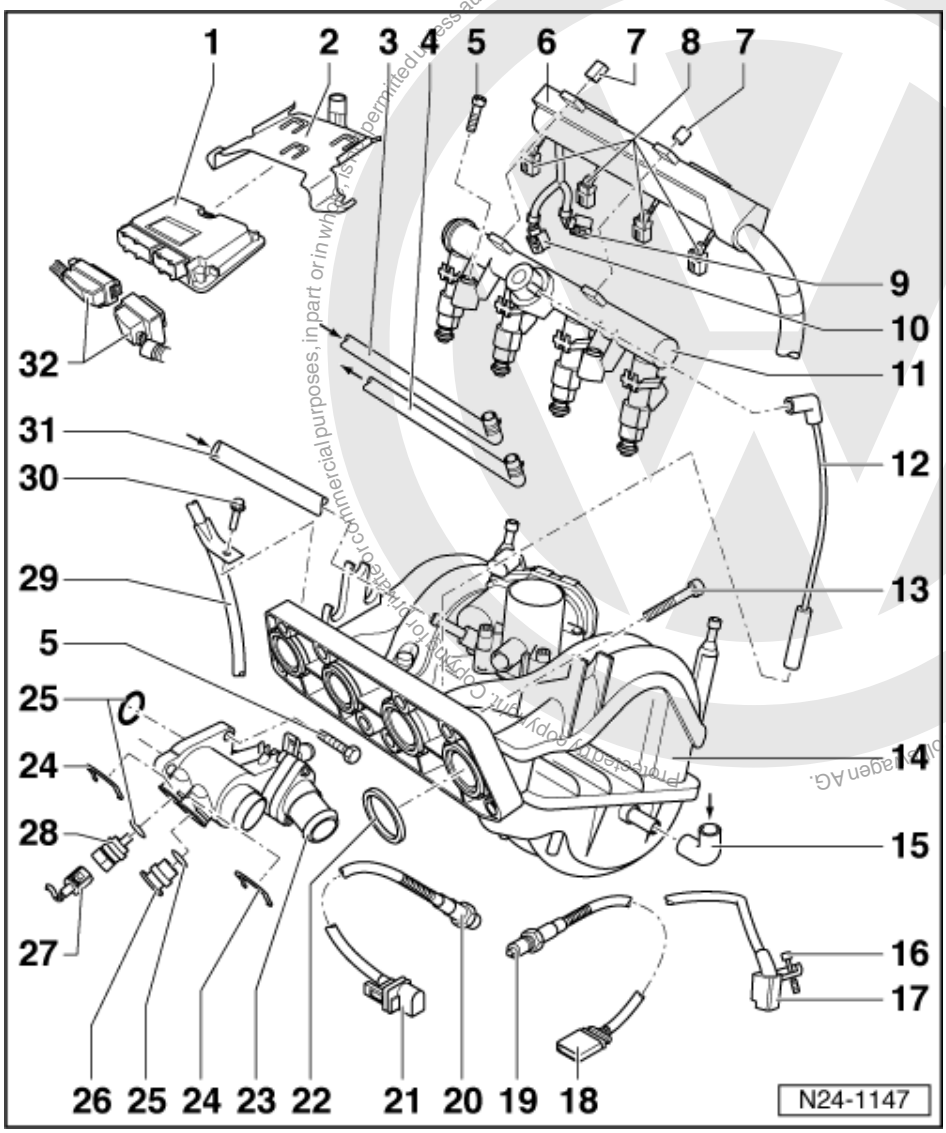

2 Retaining frame

3 Supply hose

- Black with white marks
- Secure with spring-type clips
- Check securely seated
- From fuel filter:

=> Repair Group 20; Removing and installing parts of fuel supply system; Removing and installing fuel tank with attachments and fuel filter Removing and installing parts of fuel supply system Removing and installing fuel tank with attachments and fuel filter

4 Return hose

- Blue or with blue marking
- Secure with spring-type clips
- Check securely seated
- To the fuel delivery unit in fuel tank

=> Repair Group 20; Removing and installing parts of fuel supply system; Removing and installing fuel tank with attachments and fuel filter Removing and installing parts of fuel supply system Removing and installing fuel tank with attachments and fuel filter

satelettronica

Copyright by Volkswagen AG. Volkswagen AG does not guarantee or accept any liability with respect to the correctness of information in this document. Copyright by Volkswagen AG. Reproduction, in whole or in part, is not permitted unless authorised by Volkswagen AG. Volkswagen AG does not guarantee or accept any liability with respect to the correctness of information in this document. Copyright by Volkswagen AG. Reproduction, in whole or in part, is not permitted unless authorised by Volkswagen AG. Volkswagen AG does not guarantee or accept any liability with respect to the correctness of information in this document. Copyright by Volkswagen AG.

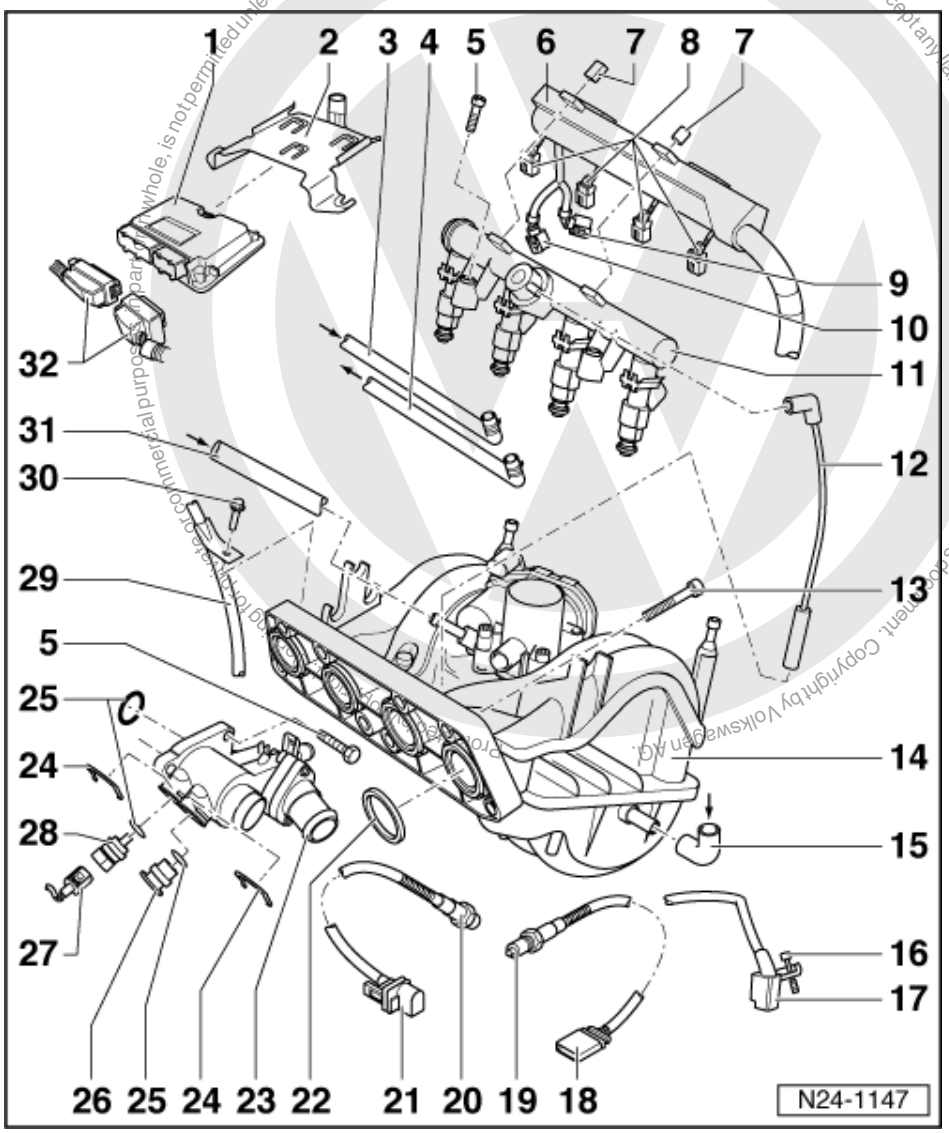

5 10 Nm

6 Cable/line guide
- Clipped onto fuel rail

7 Securing clip
- Note version

8 Connector
- Black, 2-pin
- For injector (N30...N33)

9 Connector
- Black, 6-pin
- For throttle valve control part (J338)
- Connector contacts are gold-plated

10 Connector
- Black, 4-pin
- For intake manifold pressure sender and sender for intake air temperature in intake manifold
- Connector contacts are gold-plated

satelettronica

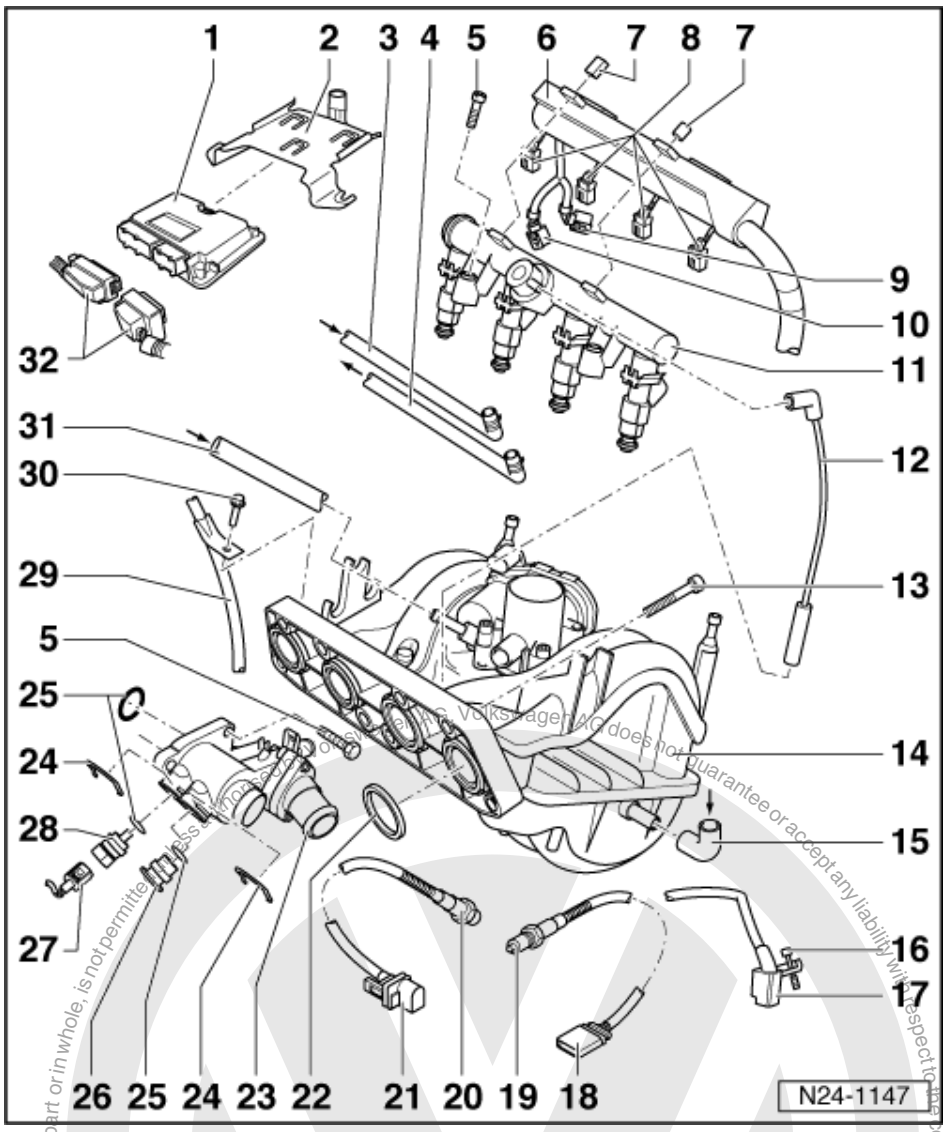

11 Fuel manifold with injectors
- Dismantling and assembling => Page 65

12 Vacuum hose

13 20 Nm

14 Intake manifold
- Dismantling and assembling => Page 65

15 From brake servo

16 5 Nm

17 Engine speed sender (G28)*
- Fitting location => Page 48 , fitting location overview
- To remove, remove intake manifold item 14
- Checking => Page 94

Protected by copyright. Copyright by Volkswagen AG.
Copyright by Volkswagen AG, Wolfsburg. It is not to be republished in whole or in part or in whole, is not permitted without the express written permission of Volkswagen AG. Volkswagen AG does not guarantee or accept any liability with respect to the correctness of information in this document.
satelettronica

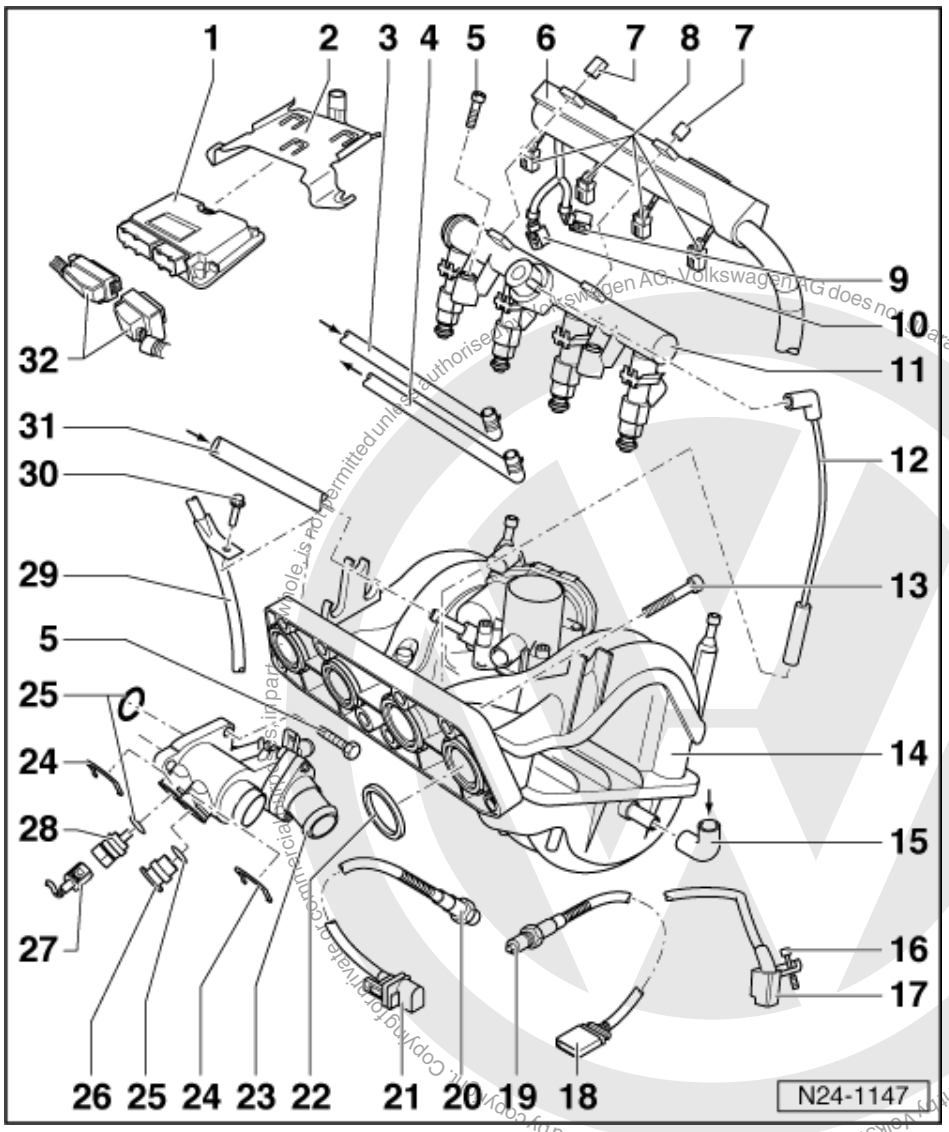

18 Connector

- For Lambda probe 2 after catalyst (G130) and Lambda probe heating (Z29)
- Black, 4-pin
- Contacts 3 and 4 gold plated

19 Lambda probe 2 after catalyst (G130)*, 50Nm

- Engines fulfilling D4 standard only
- Fitting location => Page 48 , engine compartment overview
- Grease only the threads with "G 052 112 A3"; "G 052 112 A3" must not get into the slots on the probe body
- Probe heating voltage supply via fuel pump relay (J17)
- Check Lambda probe heating for Lambda probe after catalyst => Page 78
- Check Lambda probe and Lambda regulation after catalyst => Page 116

satelettronica

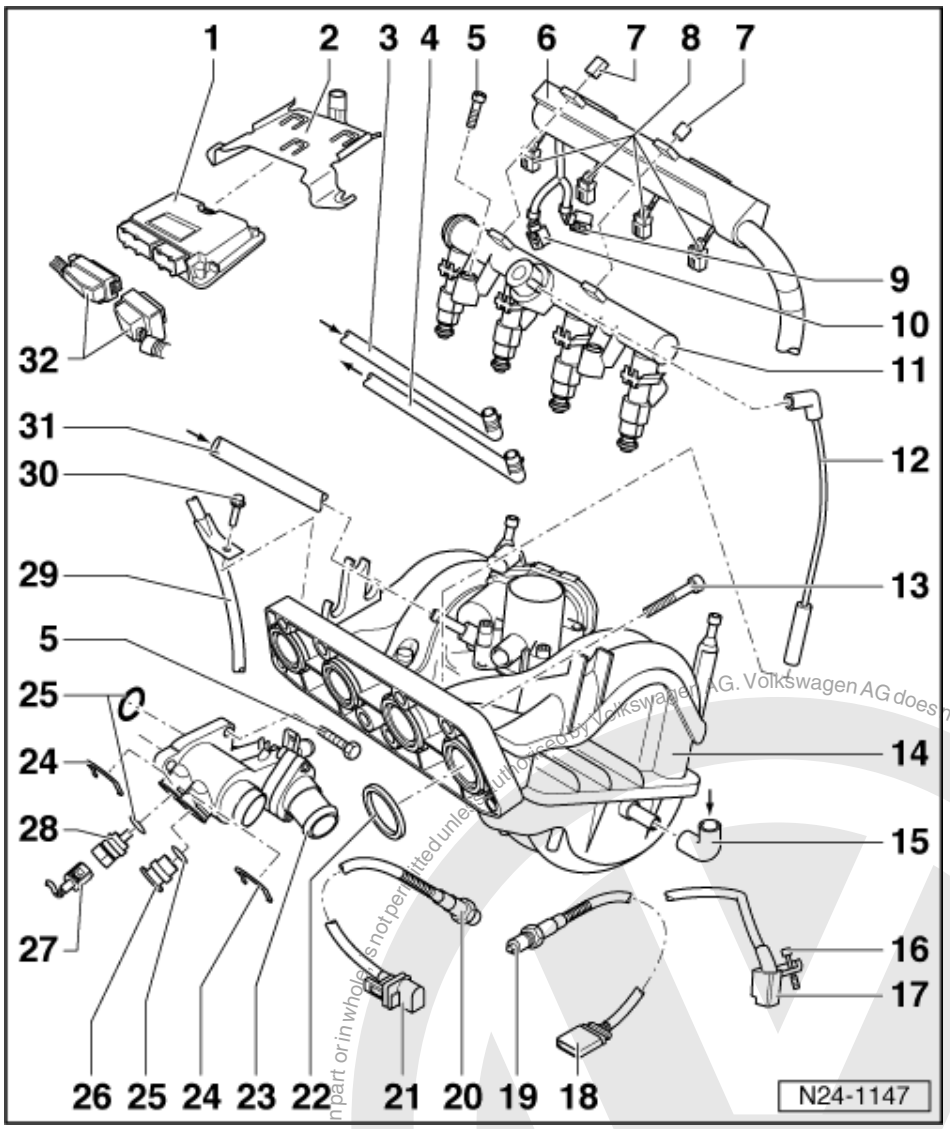

20 Lambda probe 1 before catalyst (G39)*, 50Nm

- Fitting location => Page 48 , engine compartment overview
- Grease only the threads with "G 052 112 A3"; "G 052 112 A3" must not get into the slots on the probe body
- Probe heating voltage supply via fuel pump relay (J17)
- Checking Lambda probe heating before catalyst => Page 74
- Checking Lambda probe and Lambda regulation before catalyst => Page 111
  Engine codes ANW, AUD
- Checking Lambda probe ageing Lambda probe 1 => Page 120

Protected by copyright. Copying for private or commercial purposes, in part or in whole, is not permitted unless authorised by Volkswagen AG. Volkswagen AG does not guarantee or accept any liability with respect to the correctness of information in this document. Copyright by Volkswagen AG.
satelettronica

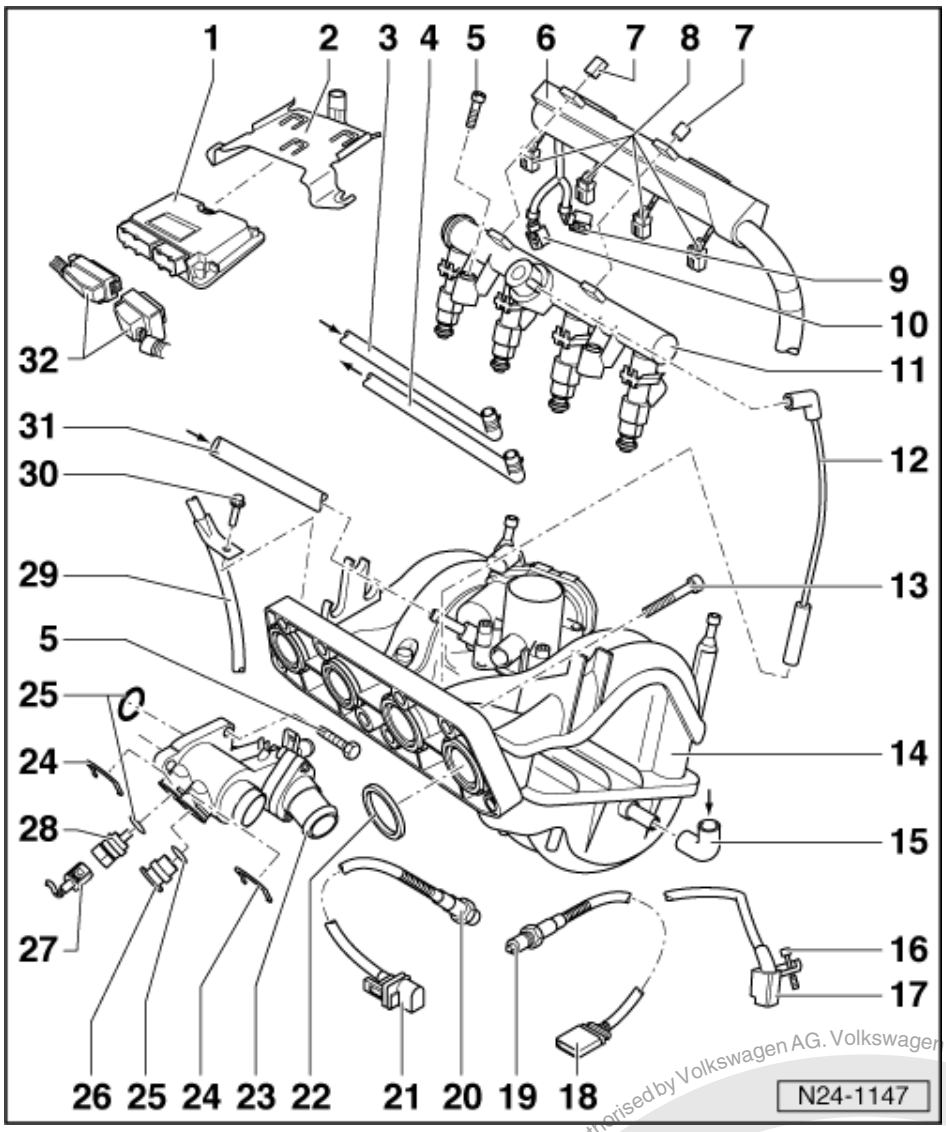

21 Connector
- For Lambda probe 1 before catalyst (G39) and Lambda probe heating (Z19)
  Engine code AKK
- Black, 4-pin
- Connector contacts 3 and 4 are gold-plated
  Engine codes ANW, AUD
- Black, 6-pin
- Contacts gold plated

22 Seal
- Renew

23 Thermostat housing

24 Retaining clip
- Check seated securely

25 O-ring
- Renew if damaged

26 Plug
- If necessary release pressure in cooling system before removing

satelettronica
Protected by copyright. Copying for private or commercial purposes, in part or in whole, is not permitted unless authorised by Volkswagen AG. Volkswagen AG does not guarantee or accept any liability with respect to the correctness of information in this document. Copyright by Volkswagen AG.

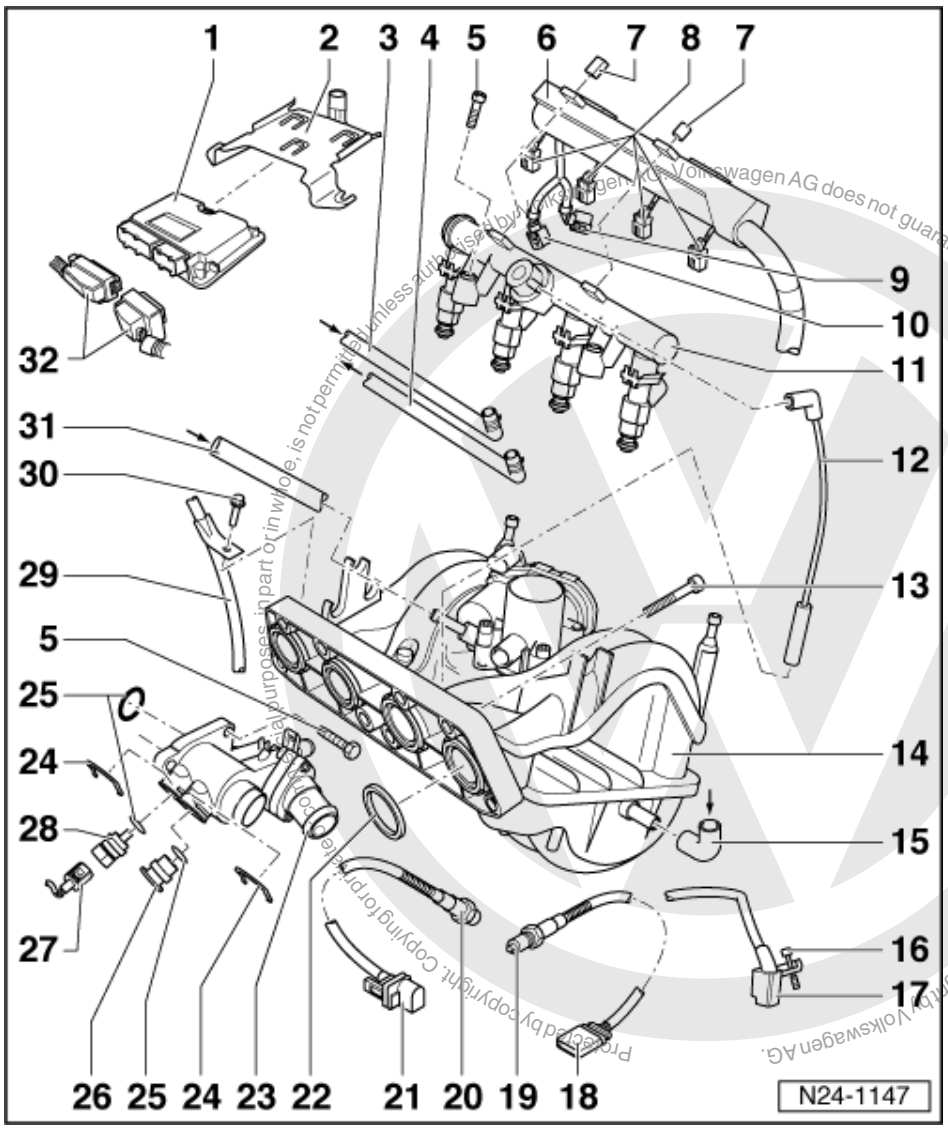

Volkswagen AG does not guarantee or accept any liability with respect to the correctness of information in this document. Copyright by Volkswagen AG.
Reproduced by copyright. Copying for private or commercial purposes, in part or in whole, is not permitted unless authorised by Volkswagen AG.

27 Connector

- Black, 4-pin
- For coolant temperature sender (G62) and coolant temperature gauge sender (G2)

28 Coolant temperature sender (G62)*

- Green
- For engine control unit
- With coolant temperature gauge sender (G2)
- If necessary release pressure in cooling system before removing
- Resistance values between contacts 3 and 4
  =>Page 71 , Fig. 1
- Checking =>Page 90

29 Guide tube

- For dipstick

30 6 Nm

- Notes on installing => Page 72

satelettronica

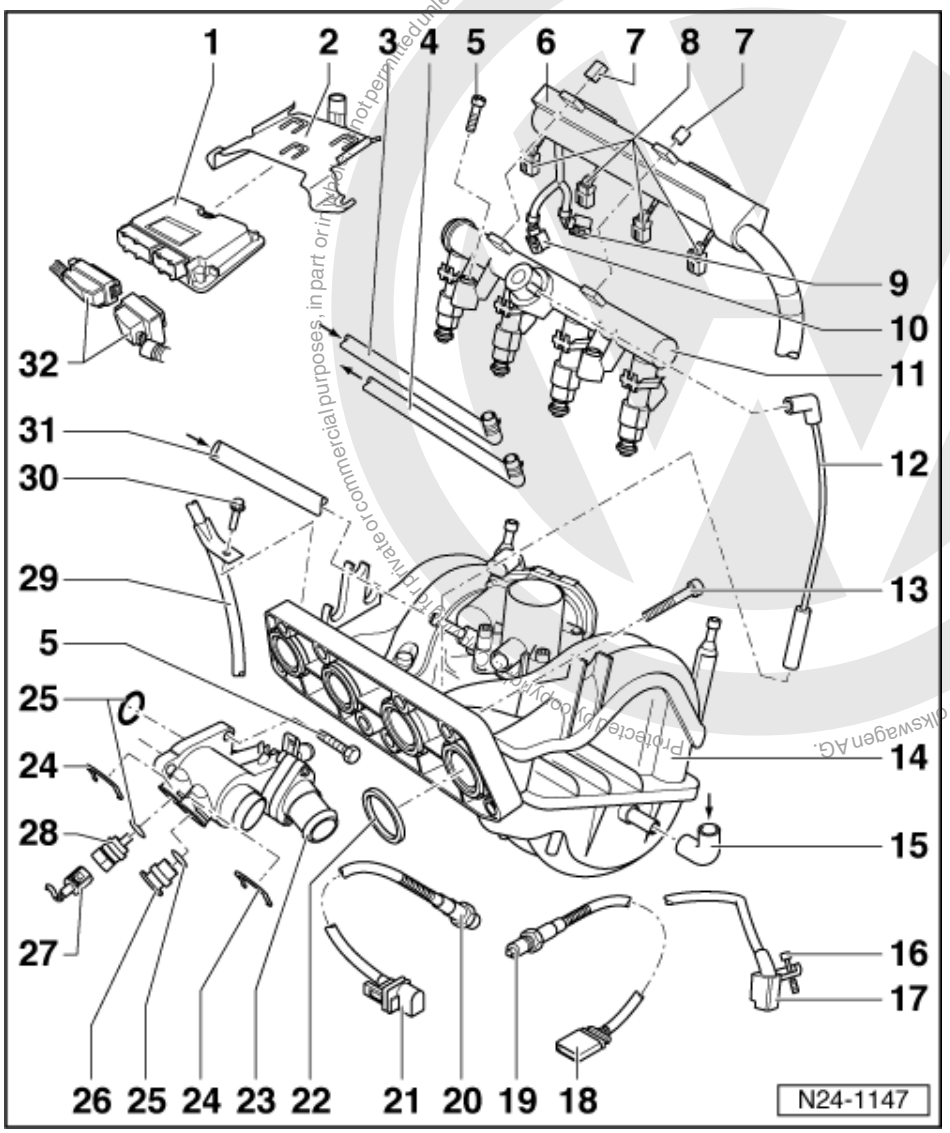

31 Vent pipe

- From tank venting valve in activated charcoal filter:

=> Repair group 20; Activated charcoal filter system Activated charcoal filter system

32 Connector

- Only disconnect or connect with ignition switched off

satelettronica

1.5 - Dismantling and assembling intake manifold

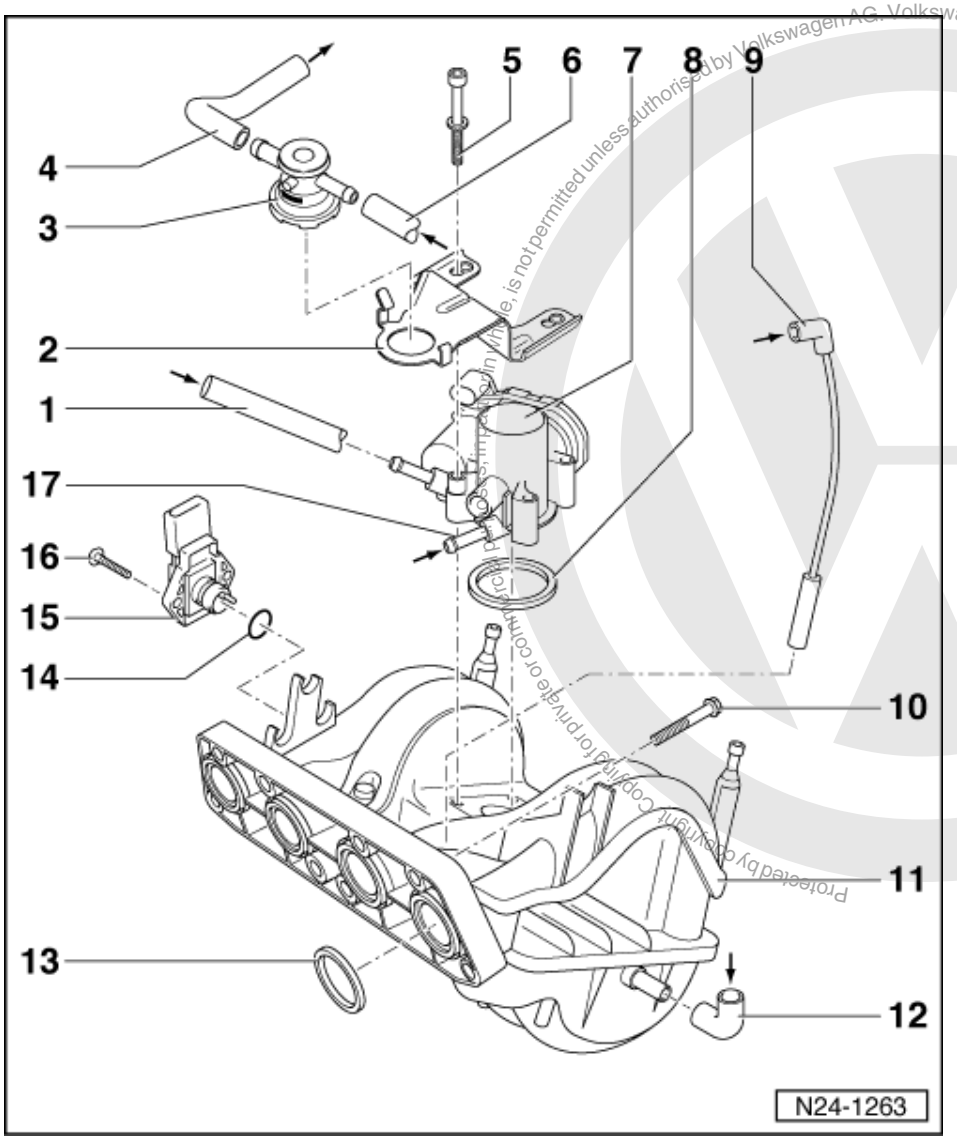

Protected by copyright. Copying for private or commercial purposes, in any form and by any means, is not permitted unless authorised by Volkswagen AG. Volkswagen AG does not guarantee or accept any liability with respect to the correctness of information in this document. Copyright by Volkswagen AG.

satelettronica

1 Vent pipe
- From tank venting valve in activated charcoal filter:

=> Repair group 20; Activated charcoal filter system Activated charcoal filter system

2 Bracket
3 Vacuum valve
- Checking => Page 107

4 Breather hose
- To throttle valve control part

5 10 Nm
6 Breather hose
- From crankshaft breather housing connection

7 Throttle valve control part (J338)*
- Checking => Page 81
- If replaced match engine control unit => Page 127
- Connector contacts are gold-plated

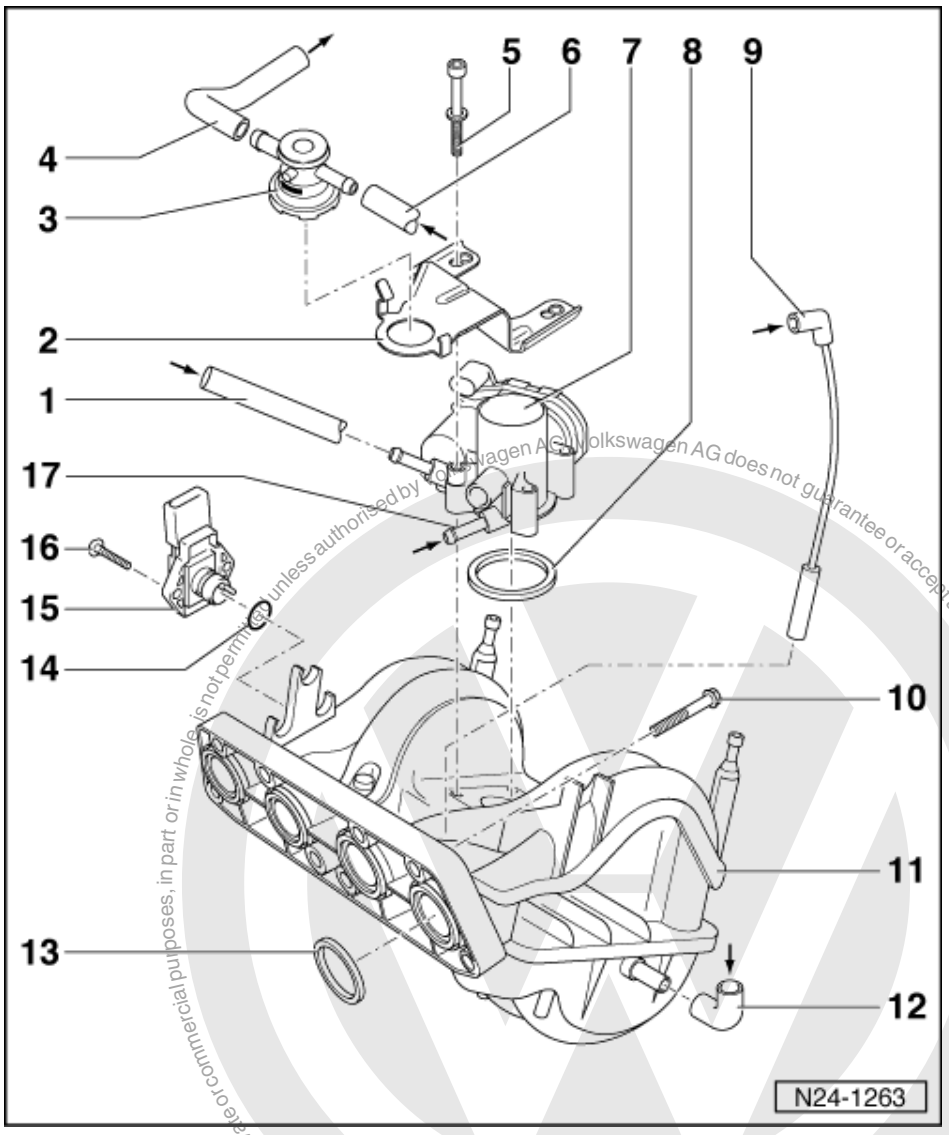

8 Seal
- Renew if damaged

9 Vacuum hose
- From fuel pressure regulator
  => Page 66 , item 6

10 20 Nm

11 Intake manifold
- Removing and installing
  =>Page 53 , removing and installing parts of the injection system

12 From brake servo

13 Seal
- Renew

Protected by copyright. Copying for private or commercial purposes, in part or in whole, is not permitted unless authorised by Volkswagen AG. Volkswagen AG does not guarantee or accept any liability with respect to the correctness of information in this document. Copyright by Volkswagen AG.
satelettronica

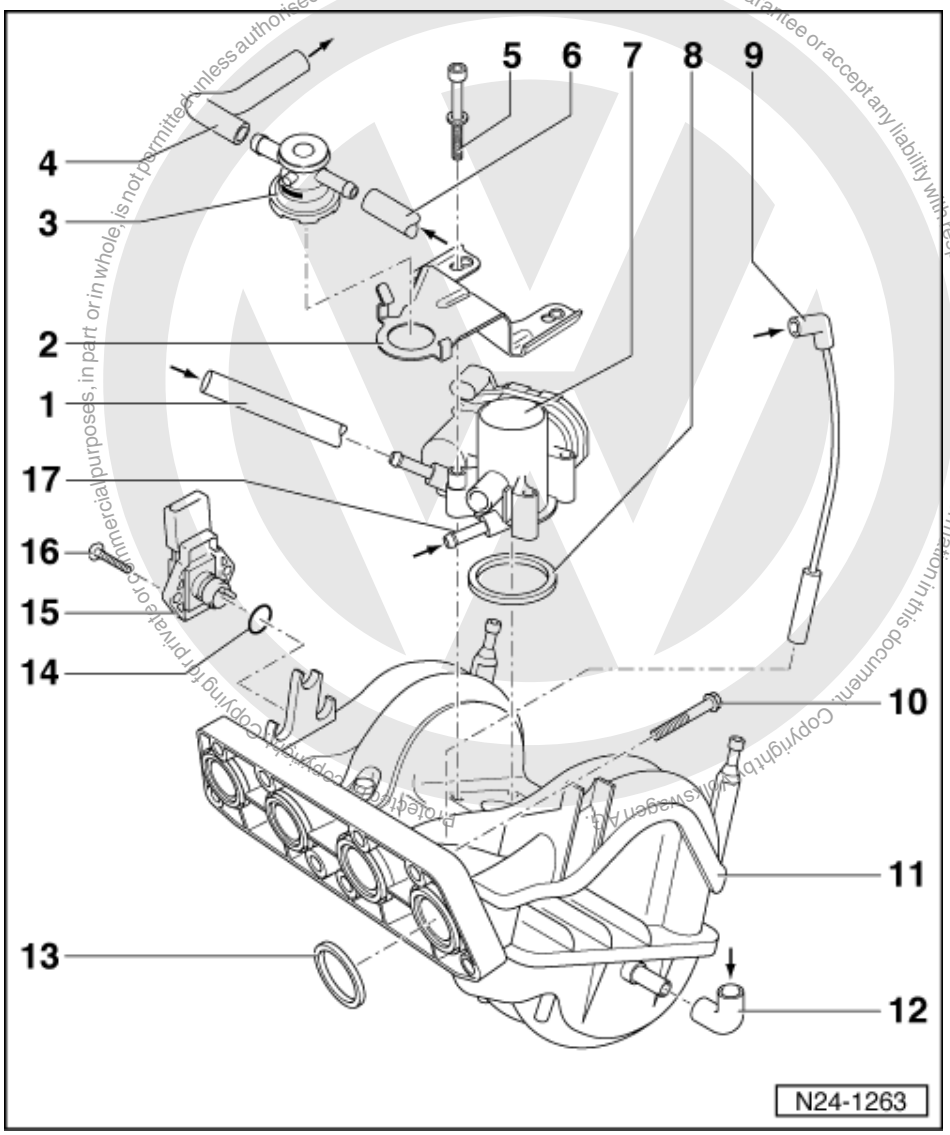

14 O-ring

- Renew if damaged

15 Intake manifold pressure sender (G71)* with intake air temperature sender (G42)*

- Checking intake manifold pressure sender =>Page 84
- Checking intake air temperature sender =>Page 86
- Intake air temperature sender resistance values between contacts 1 and 2=>Page 71 , Fig. 2

16 3 Nm

- Notes on installing => Page 72

17 Connection

satelettronica

1.6 - Dismantling and assembling fuel rail with injectors

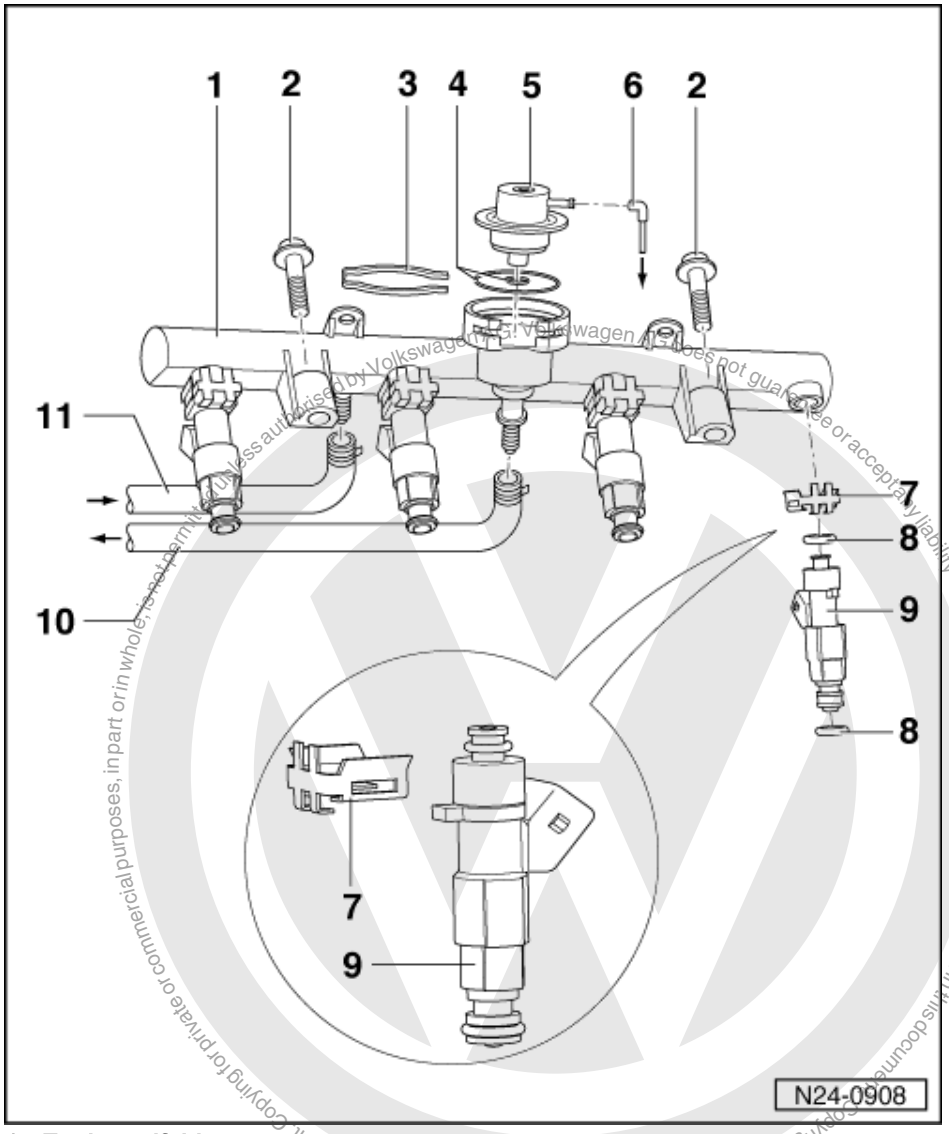

1 Fuel manifold
- Removing and installing =>Page 99 , checking spray pattern and injectors for leaks

2 10 Nm

3 Retaining clip
- Check seated securely

4 O-ring
- Renew if damaged
- Before installing moisten with clean engine oil

5 Fuel pressure regulator
- Checking => Page 102 , checking fuel pressure regulator and holding pressure

satelettronica

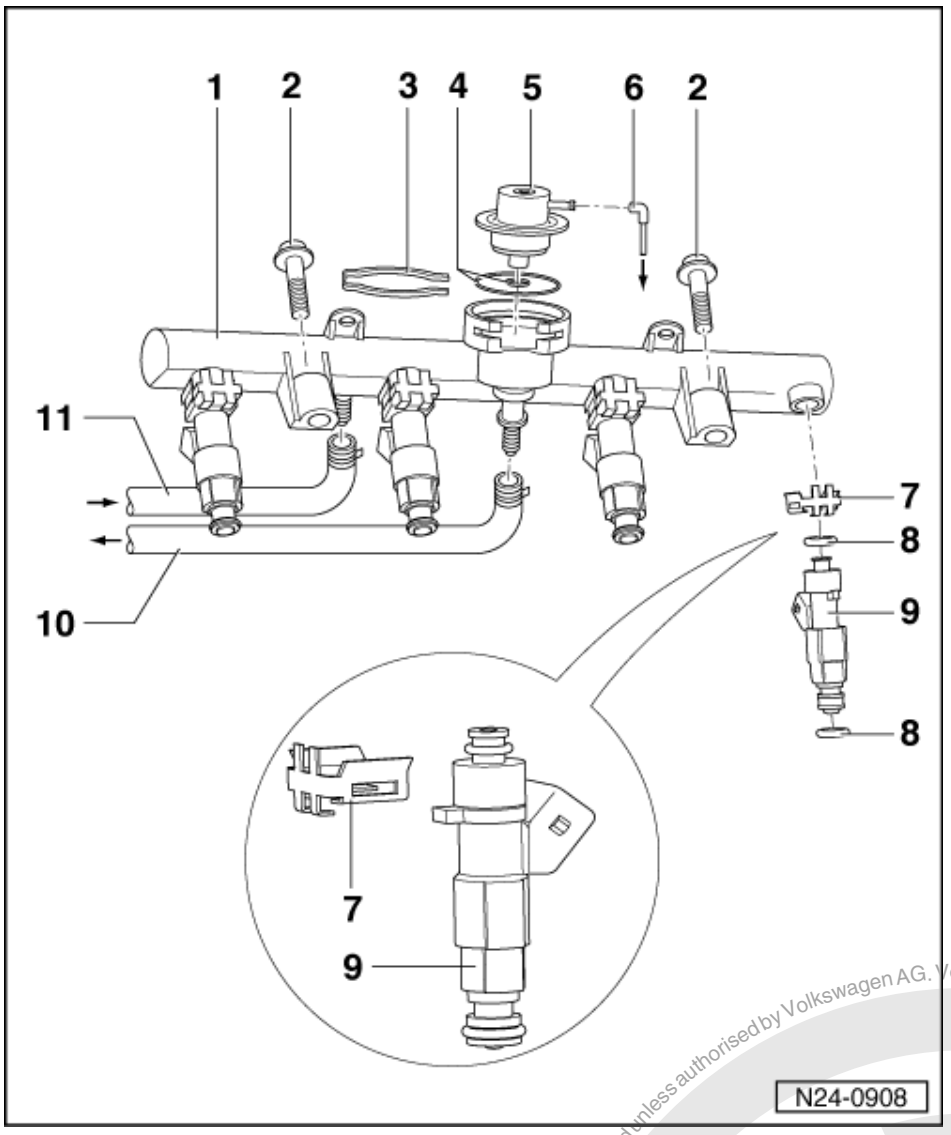

6 Vacuum hose
- To intake manifold => Page 63 , item 9

7 Retaining clip
- Ensure seated correctly at injector and fuel rail

8 O-ring
- Renew
- Before installing moisten with clean engine oil

9 Injectors (N30...N33)*
- Checking => Page 96
- Resistance 12...17 ω

satelettronica
Protected by copyright. Copying for private or commercial purposes, in part or in whole is not permitted unless authorised by Volkswagen AG. Volkswagen AG does not guarantee or accept any liability with respect to the correctness of information in this document. Copyright by Volkswagen AG.

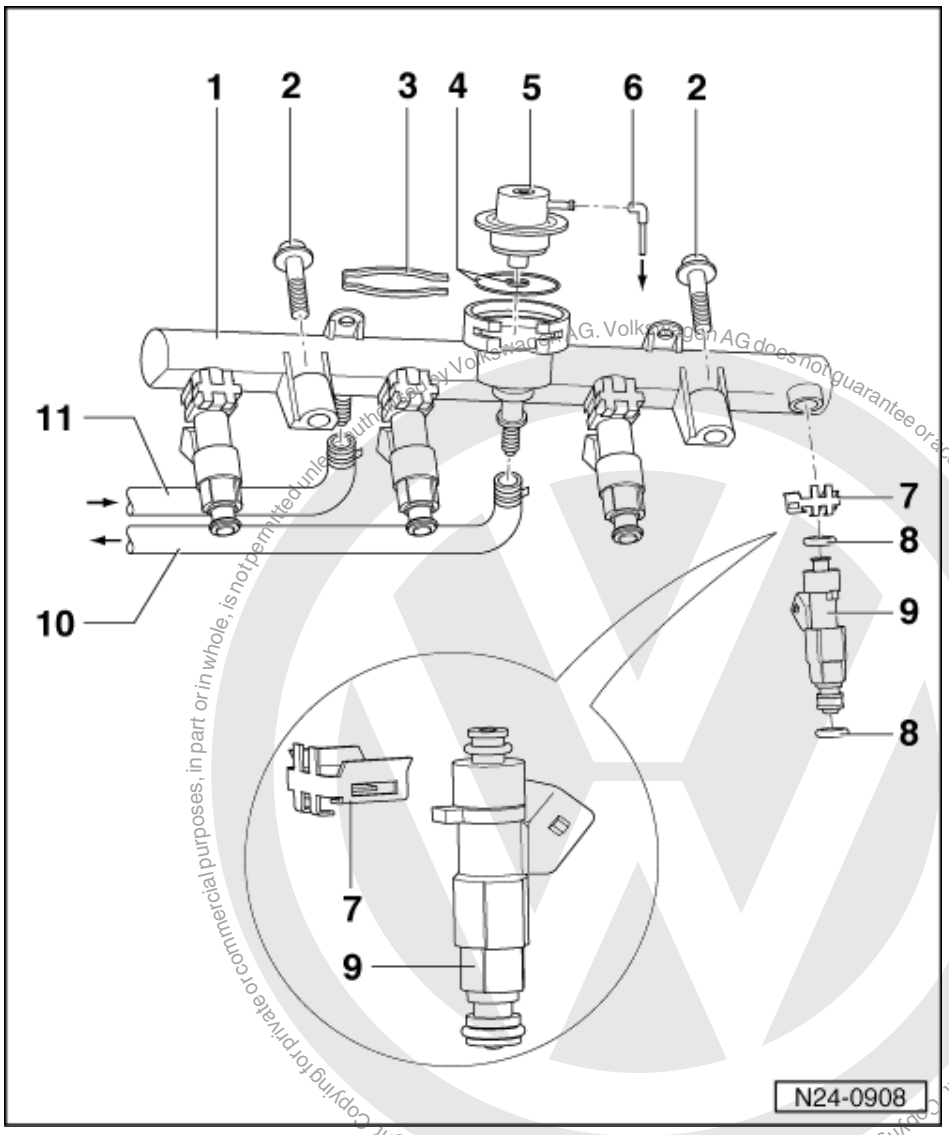

10 Return hose

- Blue or with blue marking
- Secure with spring-type clips
- Check securely seated
- To the fuel delivery unit in fuel tank

=> Repair Group 20; Removing and installing parts of fuel supply system; Removing and installing fuel tank with attachments and fuel filter Removing and installing parts of fuel supply system Removing and installing fuel tank with attachments and fuel filter

11 Supply hose

- Black with white marks
- Secure with spring-type clips
- Check securely seated
- From fuel filter:

=> Repair Group 20; Removing and installing parts of fuel supply system; Removing and installing fuel tank with attachments and fuel filter Removing and installing parts of fuel supply system Removing and installing fuel tank with attachments and fuel filter

Protected by copyright. Copyright by Volkswagen AG. Volkswagen AG does not guarantee or accept any liability with respect to the correctness of information in this document. Copying for private or commercial purposes, in part or in whole, is not permitted unless authorised by Volkswagen AG.
satelettronica

1.7 - Dismantling and assembling air cleaner

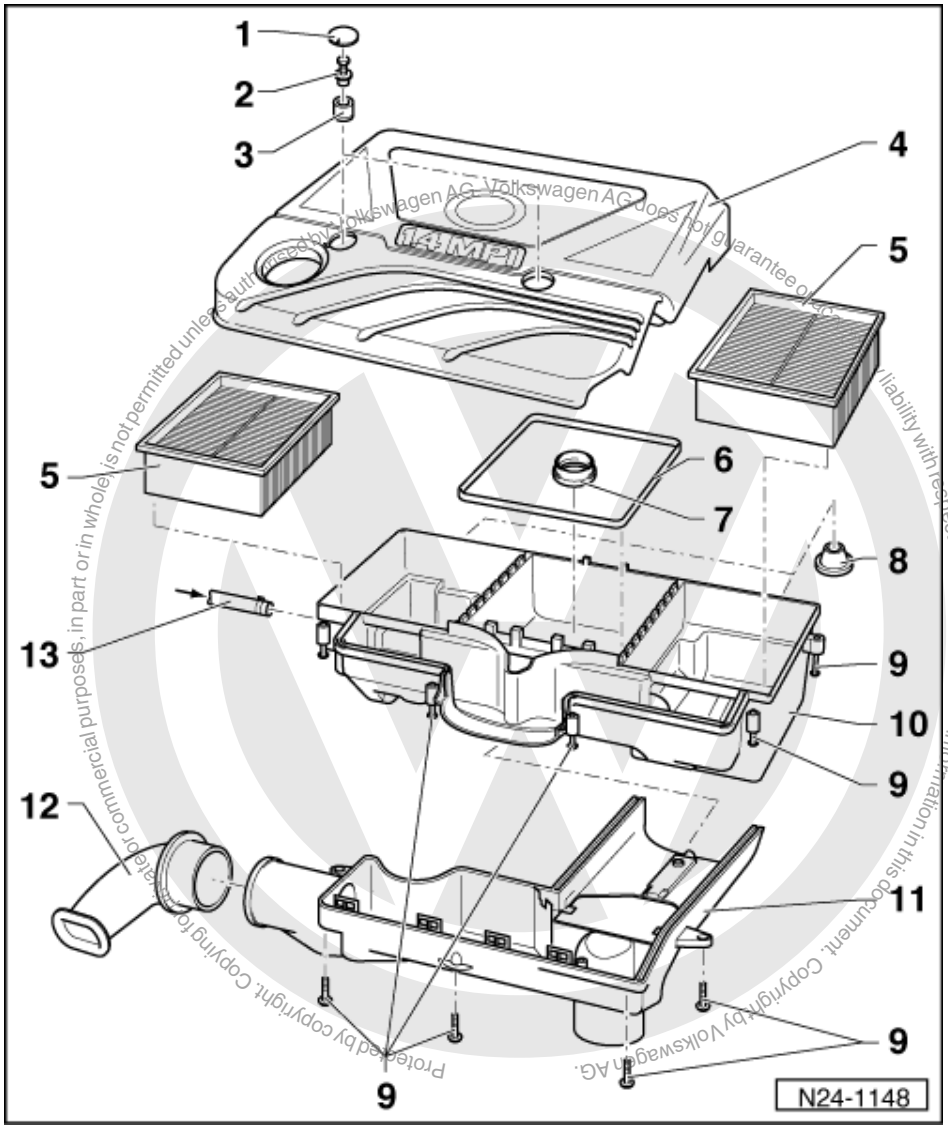

Removing and installing air cleaner => Page 71 , Fig. 3

1 Plug
- Renew if damaged

2 Hexagon bolt, 10 Nm
- With guide for spacer

3 Spacer sleeve
4 Air cleaner upper part
5 Filter element
6 Gasket
- Note installation position
- Renew if damaged

satelettronica

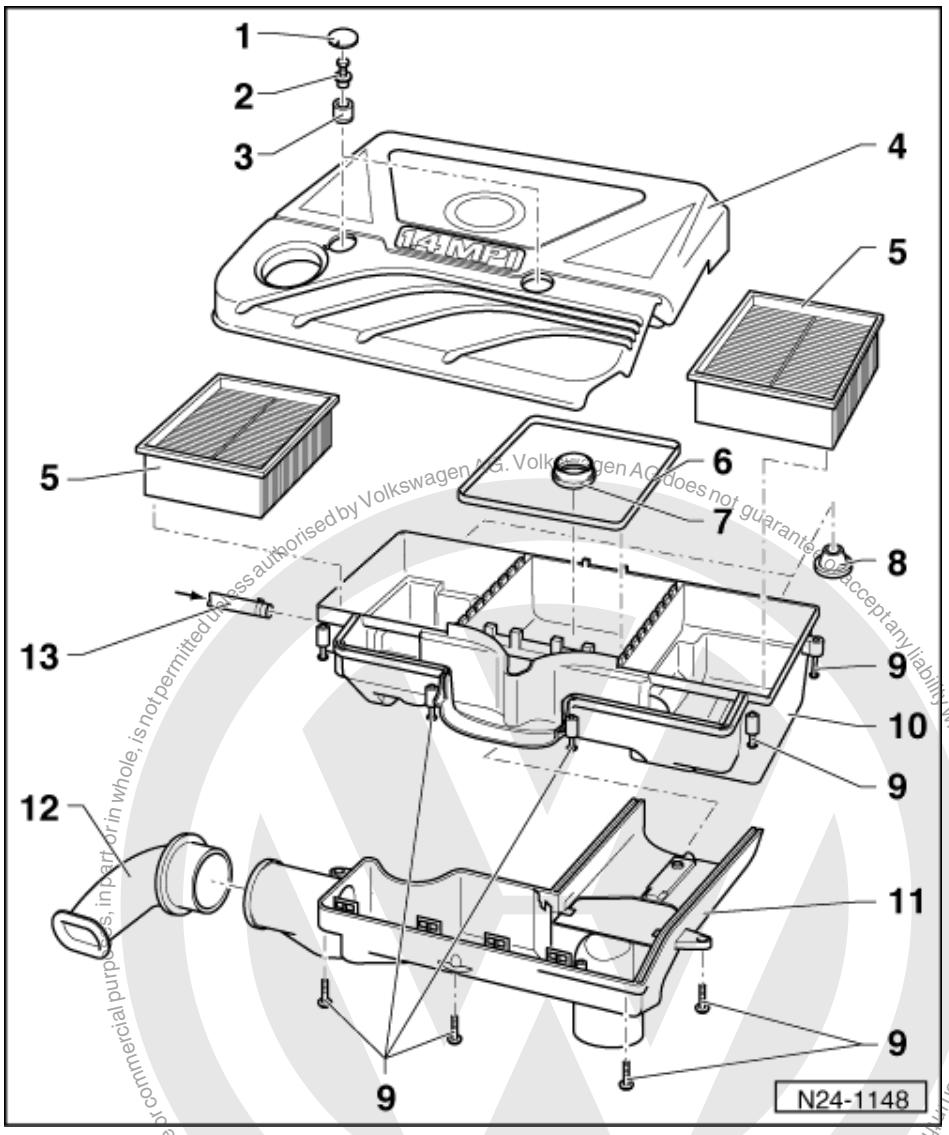

7 Seal
- Check securely seated
- Renew if damaged

8 Stop
- Check securely seated
- Renew if damaged

9 3 Nm
- Notes on installing => Page 72

10 Air cleaner lower part

11 Air intake housing with regulating flap
- Check intake air preheating => Page 107

12 Connecting piece for cold air intake
- Note installation position

Protected by copyright. Copyright by Volkswagen AG.
Copyright by Volkswagen AG. Volkswagen AG does not guarantee or accept any liability with respect to the correctness of information in this document.
Copying for private or commercial purposes, in part or in whole, is not permitted unless authorised by Volkswagen AG.
satelettronica

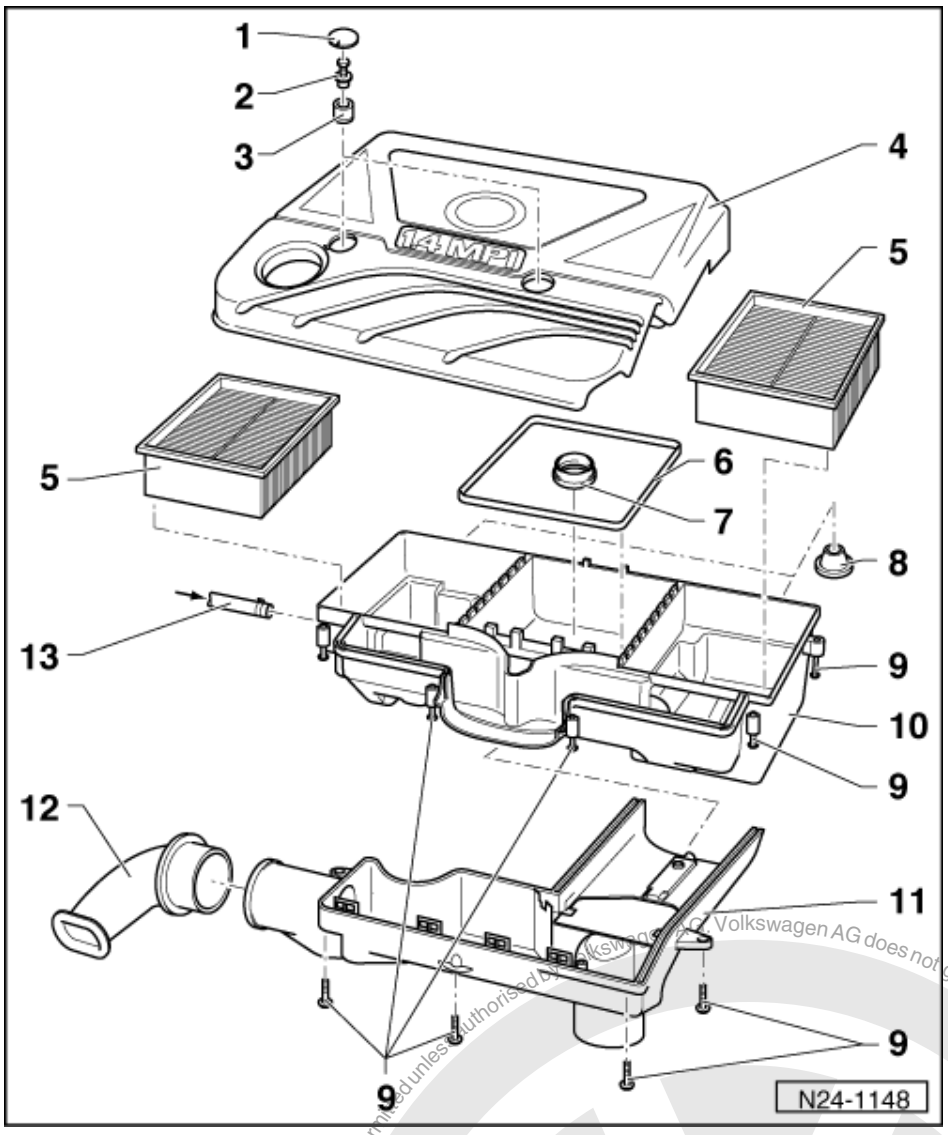

13 Crankcase breather hose

- From oil separator:

=> Repair group 17; Removing and installing parts of lubrication system Removing and installing parts of lubrication system

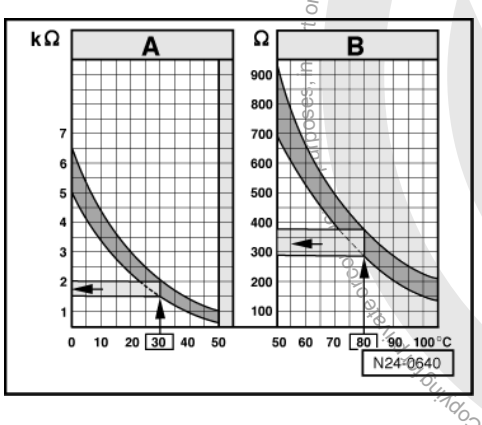

satelettronica
Volkswagen AG does not guarantee or accept any liability with respect to the correctness of information in this document. Copyright by Volkswagen AG.
Protected by copyright. Copying, in whole or in part, is not permitted unless authorised by Volkswagen AG. For internal use only.

-> Fig. 1 Resistance values for coolant temperature sender (G62)

The diagram is divided into two temperature ranges:

A - From 0...50 °C
B - From 50...105 °C

Examples:

- 30 °C is in range A and corresponds to a resistance of 1.5...2.0 kω
- 80 °C is in range B and corresponds to a resistance of 275...375 ω

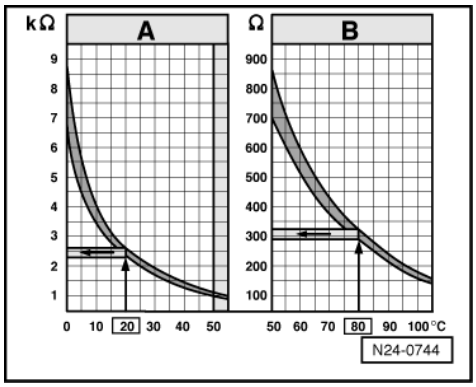

-> Fig.2 Resistance values for intake air temperature sender (G42)

The diagram is divided into two temperature ranges:

A - From 0...50 °C
B - From 50...105 °C

Examples:

- 20 °C is in range A and corresponds to a resistance of 2.3...2.6 kω
- 80 °C is in range B and corresponds to a resistance of 290...330 ω

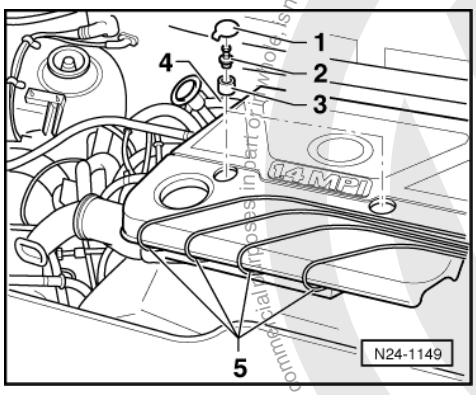

-> Fig. 3 Removing and installing air cleaner

Removing

- Remove plugs -1-.
- Remove securing screws -2-.
- Pull crankcase breather hose -4- off air cleaner housing.
- Pull cylinder head cover breather hose off air cleaner housing.
- Unclip ignition cables -5- out of air cleaner upper part.

satelettronica
Copyright by Volkswagen AG. Volkswagen AG does not guarantee or accept any liability with respect to the correctness of information in this document. Copyright by Volkswagen AG. Copying for private or commercial purposes, in part or in whole, is not permitted unless authorised by Volkswagen AG.

- Remove air cleaner.

Installing

- Installing the air cleaner is carried out in the reverse order.

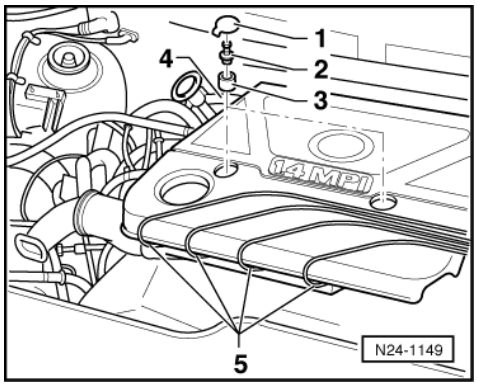

- -> Tighten securing screws -2- to 10 Nm.
  (Ensure that the spacer sleeves -3- are first fitted into the air cleaner upper part.)
- Ensure that the ignition cables -5- are laid so that the loops of the cables do not touch the air cleaner housing.

Notes:

When installing, ensure that the connecting pipe over the warm air intake is not touching body work.

To secure the air cleaner lower part to the air cleaner upper part self tapping screws are used. If these screws are loosened or tightened with a power tool the thread in the air cleaner upper or lower parts can be damaged.

For this reason the use of a power tool can only be used when:

- The maximum speed of the power tool is 300 rpm.
- The tightening torque is set to a maximum of 6 Nm.

1.8 - Safety precautions

Warning!
The fuel system is pressurized! Before loosening hose connections or opening the test connection, wrap a cloth around the connection. Then release pressure by carefully pulling off the hose or carefully unscrewing sealing plug.

To prevent injuries to persons and/or damage to the fuel injection and ignition system, the following must be noted:

- For safety reasons the fuse No. 40 must be removed from the fuse holder before opening the fuel system, otherwise the fuel pump can be activated by the door contact switch.
- Do not touch or disconnect ignition wiring when the engine is running or being turned at starter speed.
- The ignition must be switched off before connecting or disconnecting injection or ignition system wiring or tester cables.

Observe following if test and measuring instruments are required during a test drive:

- Test and measuring instruments must be secured to rear seat and operated by a 2nd person from this location.

satelettronica

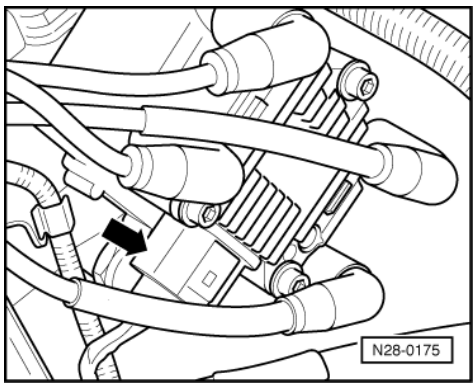

If test and measuring instruments are operated from front passenger's seat and the vehicle is involved in an accident, there is a possibility that the person sitting in this seat may receive serious injuries when the airbag is triggered.

- If the engine is to be turned at starter speed, without starting:

- -> Pull 4 pin connector off ignition transformer -arrow-.

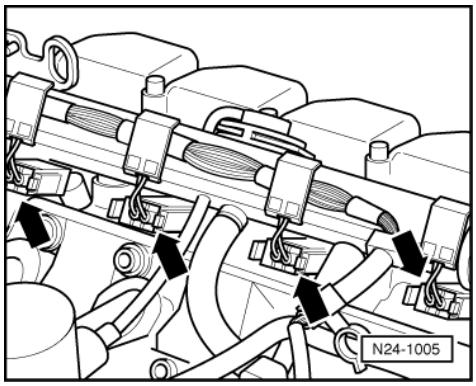

- -> Pull plug -arrows- off all injectors.

1.9 - Rules for cleanliness

When working on the fuel supply/injection system, pay careful attention to the following "5 rules":

- Thoroughly clean all unions and the adjacent areas before disconnecting.
- Place parts that have been removed on a clean surface and cover. Do not use fluffy cloths!
- Carefully cover opened components or seal, if the repair cannot be carried out immediately.
- Only install clean components:
  Only unpack replacement parts immediately prior to installation.
  Do not use parts that have been stored loose (e.g. in tool boxes etc.).
- When the system is open:
  Do not work with compressed air if this can be avoided.
  Do not move vehicle unless absolutely necessary.

1.10 - Technical data

Engine code	AKK	ANW, AUD
Idling speed check Idling speed2) rpm	810...9001)	810...9001)
Engine control unit3)		

satelettronica
Protected by copyright. Copying for private or commercial purposes, in part or in whole, is not permitted unless authorised by Volkswagen AG. Volkswagen AG does not guarantee or accept any liability with respect to the correctness of information in this document. Copyright by Volkswagen AG.

Engine code	AKK	ANW, AUD
System Part number	Motronic ME7.5.10 =>Parts film	Motronic ME7.5.10 =>Parts film
Governed speed rpm	from approx. 5700	from approx. 5700

1) Up-to-date specifications:

=> Exhaust emissions test binder

2) Not adjustable

3) Replacing engine control unit => Page 125

2 - Checking components

2.1 - Checking components

2.2 - Checking Lambda probe heating before catalyst

Special tools, workshop equipment, testers, measuring instruments and auxiliary items required

- Fault reader V.A.G 1551 or vehicle system tester V.A.G 1552 with cable V.A.G 1551/3A
- Test box V.A.G 1598/22
- Hand multimeter V.A.G 1526 or multimeter V.A.G 1715

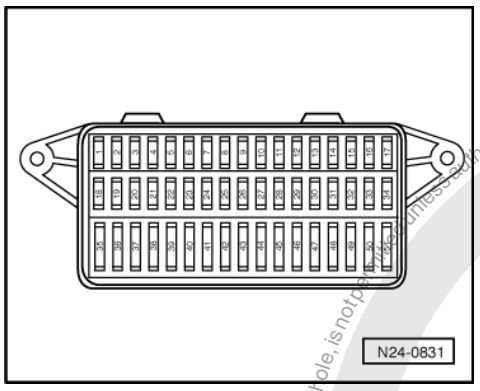

- Adapter set V.A.G 1594
- Current flow diagram

Check conditions

- -> Fuse No. 1 must be OK.
- The battery voltage must be at least 11.5 V.
- Fuel pump relay must be OK

Test sequence

- Connect fault reader V.A.G 1551 (V.A.G 1552). Start engine and select "Address word" 01 of engine control unit. When doing this the engine must be running at idling speed.
  (Connecting fault reader and selecting engine control unit => Page 4 .)

-> Indicated on display:

Protected by copyright. Copying for private or commercial purposes, in part or in whole, is not permitted unless authorised by Volkswagen AG. Volkswagen AG does not guarantee or accept any liability with respect to the correctness of information in this document. Copyright by Volkswagen AG.
satelettronica

```
Rapid data transfer      HELP
Select function XXX
```

- Press keys 0 and 8 for the function "Read measured value block" and confirm entry with Q key.

-> Indicated on display:

```
Read measured value block
Input display group number XXX
```

- Press keys 0, 4 and 1 for "Display group number 41" and confirm entry with Q key.

-> Indicated on display:
(1...4 = Display zones)

```
Read measured value block 41
     1     2     3     4
```

- Check status of Lambda probe heating before catalyst in display zone 2:
  Display: Htg.bC.ON

Note:

The Lambda probe heating may be switched on or off depending on the operating mode of the engine, therefore the display in display zone 2 may show "Htg.bC.ON or alternating from Htg.bC.ON to Htg.bC.OFF.

If the specification is obtained:

- Press ⇒key.
- Press keys 0 and 6 for the function "End output" and confirm entry with the Q key.
- Switch off ignition.

If the specification is not obtained:

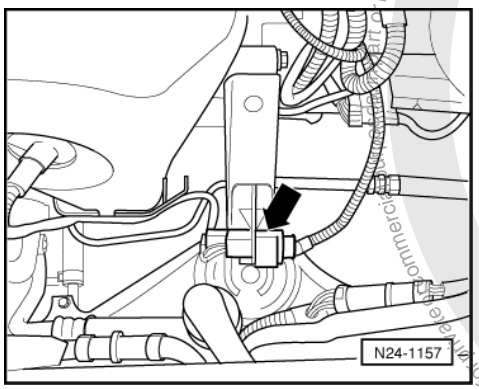

Only engine codes ANW, AUD

Engine code AKK => Page 77

- -> Separate 6-pin connector (black) to Lambda probe before catalyst (G39) -arrow-.

Checking voltage supply

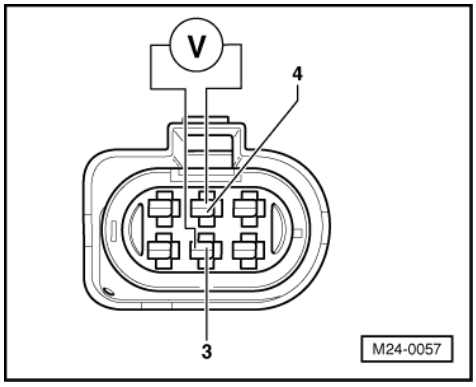

satelettronica

- -> Connect the Multimeter with aux. cables from V.A.G 1594 to measure voltage on contacts 3 + 4 (connector to engine control unit).
- Start engine and run at idling speed.
- Measure the voltage supply:
  When display group 41, display zone 2 displays
  Display, Htg.bC.ON:
  Specification: 11.0...14.5 V
  Display, Htg. bC.ON/Htg.bC.OFF (alternating)
  Specification: Between 0.0...12.0 V fluctuating
- Press ⇒key.
- Press keys 0 and 6 for the function "End output" and confirm entry with the Q key.
- Switch off ignition.

If no voltage is present:

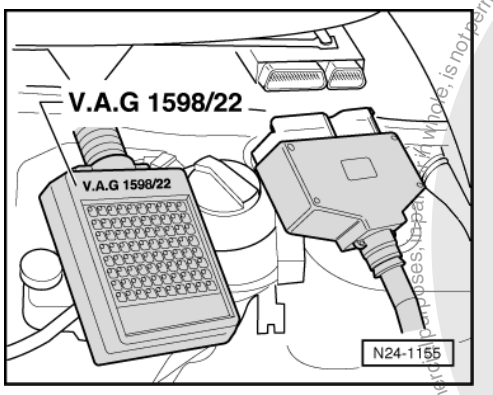

- Remove left plenum chamber cover.
- -> Connect test box V.A.G 1598/22 to control unit wiring harness.

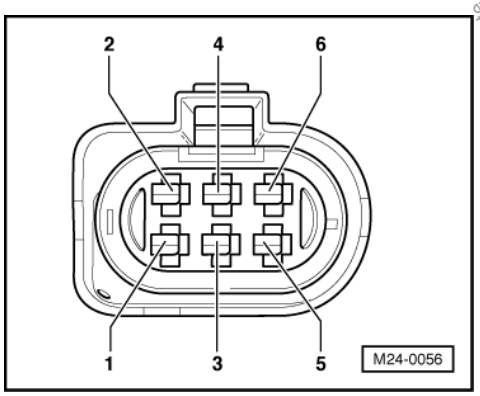

- -> Check wire between test box and 6-pin connector (connector to control unit) for open circuit using current flow diagram.
  Contact 4+socket 1
  Wire resistance: max. 1.5 ω

If the specification is obtained:

- Check wire between 6-pin connector contact 3 and fuel pump relay (J17) for open circuit using current flow diagram.
  Wire resistance: max. 1.5 ω

Protected by copyright. Copying for private or commercial purposes, in whole or in part, is not permitted unless authorised by Volkswagen AG. Volkswagen AG does not guarantee or accept any liability with respect to the correctness of information in this document. Copyright by Volkswagen AG.
satelettronica

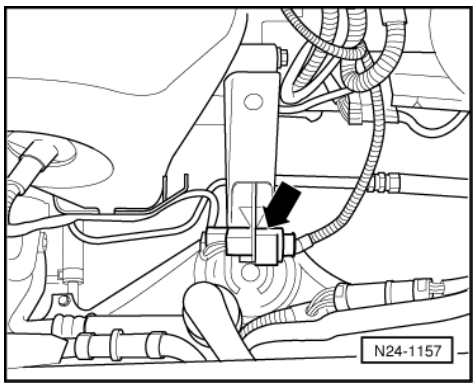

Only engine code AKK

- -> Separate 4-pin connector (black) to Lambda probe before catalyst (G39) -arrow-.

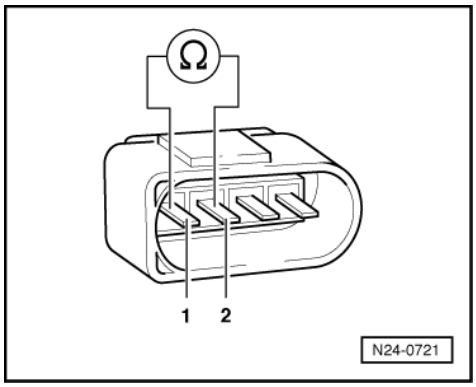

- -> Check probe heating for continuity at Lambda probe connector contacts 1 and 2.

Note:

The heater element resistance is approx. 1...5 ω at room temperature. Even slight increases in room temperature increase the resistance greatly.

If it is determined that probe heating has an open circuit:

- Renew Lambda probe before catalyst (G39)
  =>Page 51 , item 18 .

If probe heating has continuity:

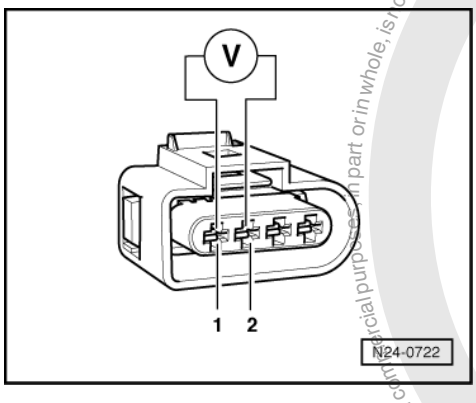

Checking voltage supply

- Set multimeter to "Voltage measurement" range.

Protected by copyright. Copying for private or commercial purposes, in part or in whole, is not permitted unless authorised by Volkswagen AG. Volkswagen AG does not guarantee or accept any liability with respect to the correctness of information in this document. Copyright by Volkswagen AG.
satelettronica

- -> Connect multimeter using aux. cables from V.A.G 1594 to measure voltage at contacts 1+2 (connector to engine control unit).
- Start engine and run at idling speed.
  Specification: 11.0...15.0 V
- Switch off ignition.

If no voltage is present:

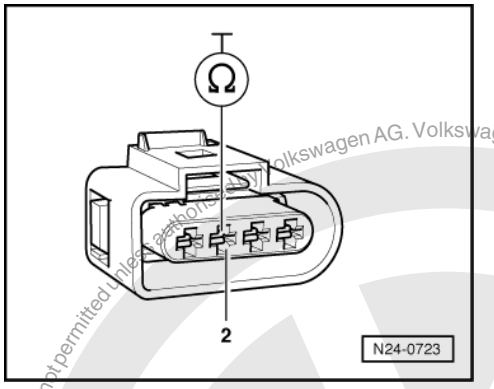

- -> Check wiring between 4 pin connector contact 2 and engine earth for open circuit
  Wire resistance: Max. 1.5 ω

If the specification is obtained:

- Check wire between 4 pin connector contact 1 and fuel pump relay (J17) for open circuit using current flow diagram.
  Wire resistance: max. 1.5 ω

2.3 - Checking Lambda probe heating after catalyst

Only engine codes ANW, AUD

Special tools, workshop equipment, testers, measuring instruments and auxiliary items required

- Test box V.A.G 1598/22
- Fault reader V.A.G 1551 or vehicle system tester V.A.G 1552 with cable V.A.G 1551/3A
- Hand multimeter V.A.G 1526 or multimeter V.A.G 1715
- Adapter set V.A.G 1594

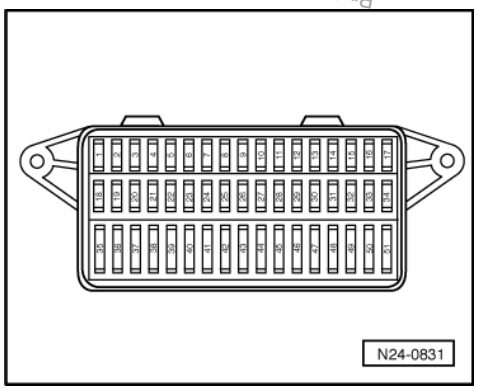

- Current flow diagram

Check conditions

- -> Fuse No. 1 must be OK.
- The battery voltage must be at least 11.5 V.

Protected by copyright. Copying for private or commercial purposes, in part or in whole, is not permitted unless authorised by Volkswagen AG. Volkswagen AG does not guarantee or accept any liability with respect to the correctness of information in this document.
satelettronica

- Fuel pump relay must be OK

Test sequence

- Connect fault reader V.A.G 1551 (V.A.G 1552). Start engine and select "Address word" 01 of engine control unit. When doing this the engine must be running at idling speed.
  (Connecting fault reader and selecting engine control unit => Page 4 .)

-> Indicated on display:

```
Rapid data transfer      HELP
Select function XXX
```

- Press keys 0 and 8 for the function "Read measured value block" and confirm entry with Q key.

-> Indicated on display:

```
Read measured value block
Input display group number XXX
```

- Press keys 0, 4 and 1 for "Display group number 41" and confirm entry with Q key.

-> Indicated on display:
(1...4 = Display zones)

```
Read measured value block 41
     1     2     3     4
```

- Check status of Lambda probe heating after catalyst in display zone 4:
  Display: Htg.aC.ON

Note:

The Lambda probe heating may be switched on or off depending on the operating mode of the engine, therefore the display in display zone 4 may show "Htg.aC.ON or alternating from Htg.aC.ON to Htg.aC.OFF.

If the specification is obtained:

- Press ⇒key.
- Press keys 0 and 6 for the function "End output" and confirm entry with the Q key.
- Switch off ignition.

If the specification is not obtained:

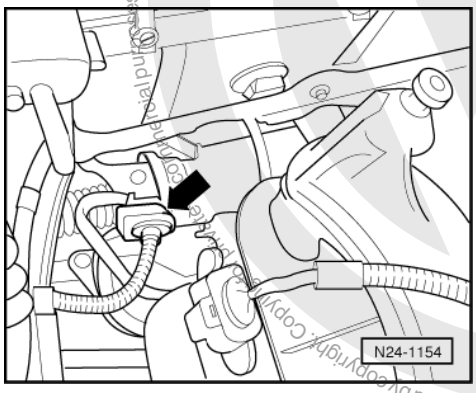

- -> Separate 4-pin connector (black) to Lambda probe after catalyst (G130) -arrow-.

satelettronica

Checking voltage supply

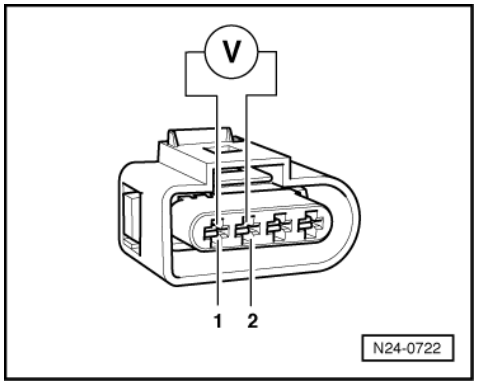

- -> Connect multimeter using aux. cables from V.A.G 1594 to measure voltage at contacts 1+2 (connector to engine control unit).
- Start engine and run at idling speed.
- Measure the voltage supply:
  When display group 41, display zone 4 displays
  Display, Htg.aC.ON:
  Specification: 11.0...14.5 V
  Display, Htg. aC.ON/Htg.aC.OFF (alternating)
  Specification: Between 0.0...12.0 V fluctuating
- Press ⇒key.
- Press keys 0 and 6 for the function "End output" and confirm entry with the Q key.
- Switch off ignition.

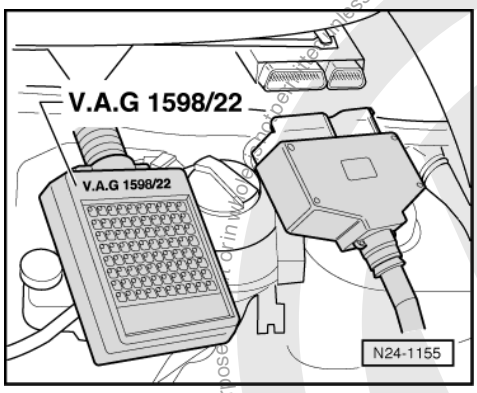

If no voltage is present:

- Remove left plenum chamber cover.
- -> Connect test box V.A.G 1598/22 to control unit wiring harness.

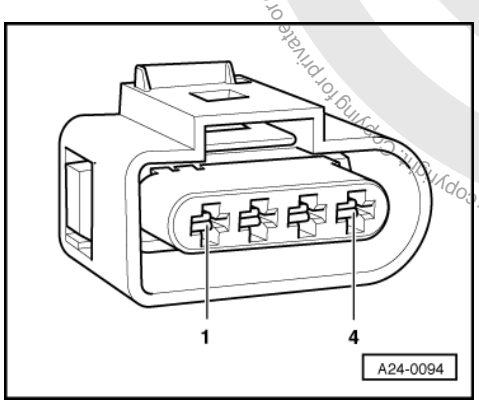

- -> Check wires between test box and 4-pin connector (connector to control unit) for open circuit using current flow diagram.
  Contact 2+socket 13

Protected by copyright. Copying for private or commercial purposes, in whole or in part, is not permitted unless authorised by Volkswagen AG. Volkswagen AG does not guarantee or accept any liability with respect to the correctness of information in this document. Copyright by Volkswagen AG.
satelettronica

Wire resistance: max. 1.5 ω

If the specification is obtained:

- Check wire between 4 pin connector contact 1 and fuel pump relay (J17) for open circuit using current flow diagram.
  Wire resistance: max. 1.5 ω

If no voltage is present and the wiring is OK:

- Renew the Lambda probe 2 after catalyst (G130) =>Page 57 , item 19 .

2.4 - Checking throttle valve control part

Components of throttle valve control part (J338):
Throttle valve drive (G186), angle sender 1 for throttle valve drive (G187) and angle sender 2 for throttle valve drive (G188).

Note:

If the throttle valve control part is replaced, the new control part must without fail be adapted to the engine control unit => Page 127 .

Special tools, workshop equipment, testers, measuring instruments and auxiliary items required

- Fault reader V.A.G 1551 or vehicle system tester V.A.G 1552 with cable V.A.G 1551/3A
- Test box V.A.G 1598/22
- Hand multimeter V.A.G 1526 or multimeter V.A.G 1715
- Adapter set V.A.G 1594
- Current flow diagram

Check conditions

- Coolant temperature must be at least 80 °C, =>display group 04, display zone 3.

Test sequence

- Connect the fault reader V.A.G 1551 (V.A.G 1552). Then switch ignition on and select engine control unit with the "Address word" 01.
  (Connecting fault reader and selecting engine control unit => Page 4 .)

-> Indicated on display:

```
Rapid data transfer      HELP
Select function XXX
```

- Press keys 0 and 8 for the function "Read measured value block" and confirm entry with Q key.

-> Indicated on display:

```
Read measured value block
Input display group number XXX
```

- Press keys 0, 6 and 2 for the "Display group number 62" and confirm entry with Q key.

-> Indicated on display:
(1...4 = Display zones)

```
Read measured value block 62
     1     2     3     4
```

- Check throttle valve angle at idling stop from sender 1 (G187) in display zone 1
  Specification: 10...90 %
- Check throttle valve at idling stop from sender 2 (G188) in display zone 2.
  Specification: 90...10 %

Copyright by Volkswagen AG. Volkswagen AG does not guarantee or accept any liability with respect to the correctness of information in this document. Copyright by Volkswagen AG. Reproduced by permission. Copyright protected. Copying for private or commercial purposes, in part or in whole, is not permitted unless authorised by Volkswagen AG.
satelettronica

- Depress accelerator slowly to full throttle position and observe angles displayed in display zones 1 and 2:

  The percentage figure in display zone 1 must increase evenly. Although the tolerance range 10...90 % will not be fully exploited.
  The percentage figure in display zone 2 must decrease evenly. Although the tolerance range 90...10 % will not be fully exploited.

Notes:

- The reason why the display in display zone 1 increases and the display in display zone 2 decreases is because the potentiometers (angle senders) in the throttle valve control part run in opposite directions.
- This means that the voltage of one angle sender moves towards 5 volts. (The more the throttle valve is opened the higher the voltage; percentage figure increases).

- Whilst the voltage of angle sender 2 decreases from 5 volts towards 0 volts. (The more the throttle valve is opened the lower the voltage; percentage figure decreases).

- Press ⇒key.
- Press keys 0 and 6 for the function "End output" and confirm entry with the Q key.
- Switch off ignition.

If the displays do not indicate as described:

- Remove air cleaner => Page 71 , Fig. 3 .

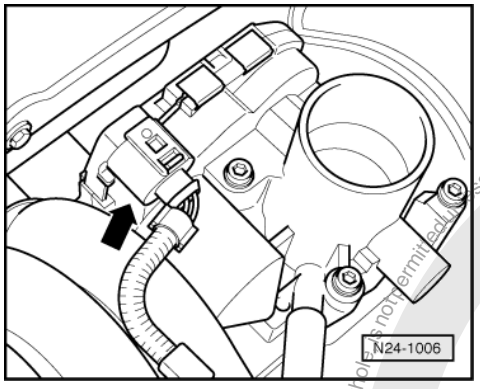

- -> Pull 6-pin connector off throttle valve control part -arrow-.

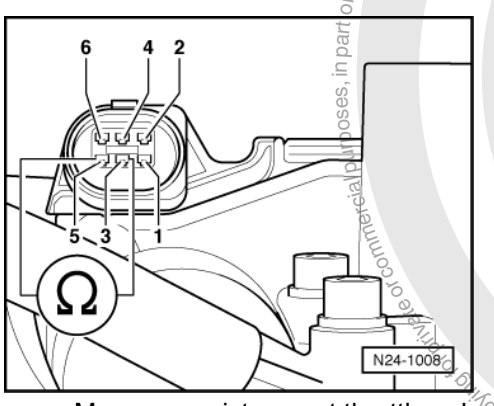

- -> Measure resistance at throttle valve drive between contacts 3 + 5
  Specification: 1.0...5.0 ω

If the specification is not obtained:

- Replace throttle valve control part
  => Page 62 , item 7 .
- Interrogate fault memory, if necessary, repair any faults and then erase fault memory => Page 7 , interrogating and erasing fault memory.

Protected by copyright. Copying for private or commercial purposes, in part or in whole, is not permitted unless authorised by Volkswagen AG. Volkswagen AG does not guarantee or accept any liability with respect to the correctness of information in this document. Copyright by Volkswagen AG.
satelettronica

- Adapt engine control unit to throttle valve control part => Page 127 .

If the specification is obtained:

- Check voltage supply of throttle valve control part and wiring to control unit => Page 83 .
- Check the accelerator pedal position sender.

=> Repair group 20; Electronic engine output regulation (electronic accelerator (EPC)); Checking accelerator pedal position sender Electronic engine output regulation (electronic accelerator (EPC)) Checking accelerator pedal position sender

If the voltage supply and wiring is OK:

- Replace engine control unit
  => Page 125 .

Checking voltage supply and wiring to control unit

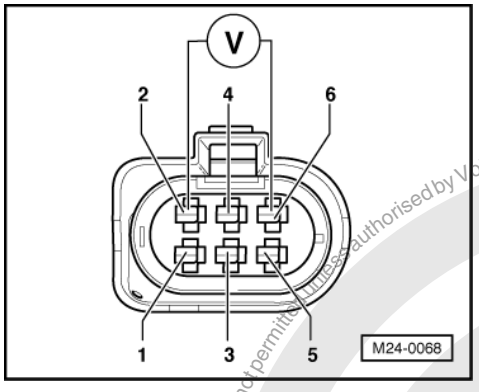

Test conditions

- The battery voltage must be at least 11.5 V.

Test sequence

- -> Connect Multimeter to measure voltage at connector contacts 2 + 6.
- Switch on ignition.
  Specification: min. 4.5 V
- Switch off ignition.

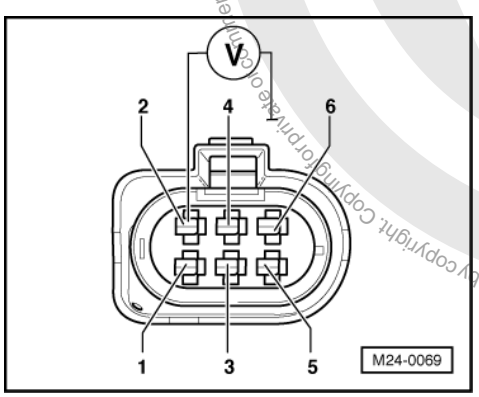

- -> Connect Multimeter to measure voltage at connector contact 2 and earth.
- Switch on ignition.
  Specification: min. 4.5 V
- Switch off ignition.

If the specifications are not attained:

Protected by copyright. Copyright by Volkswagen AG.
Copyright by Volkswagen AG. Volkswagen AG does not guarantee or accept any liability with respect to the correctness of information in this document.
Copying for private or commercial purposes, in part or whole, is not permitted unless authorised by Volkswagen AG.
satelettronica

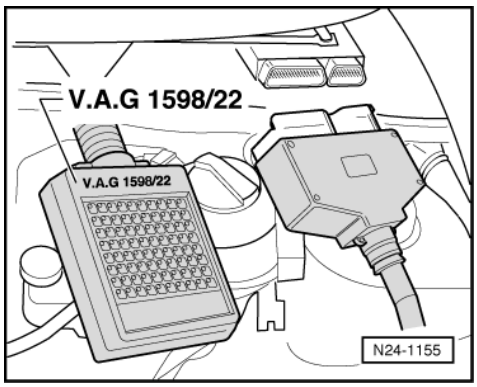

- Remove left plenum chamber cover.
- -> Connect test box V.A.G 1598/22 to control unit wiring harness.

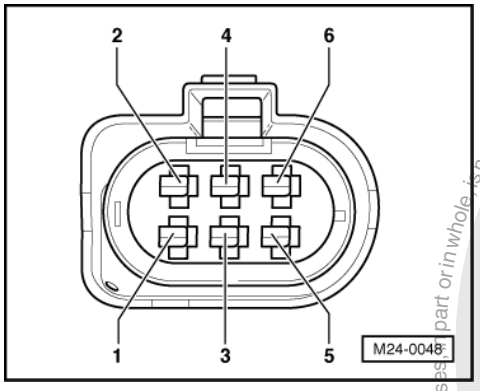

- -> Check wires between test box and 6-pin connector (connector to control unit) for open circuit using current flow diagram.
  Contact 1+socket 68
  Contact 2+socket 55
  Contact 3+socket 80
  Contact 4+socket 75
  Contact 5+socket 66
  Contact 6+socket 61
  Wire resistance: max. 1.5 ω
- Additionally check wires for short to one another, to vehicle earth and to battery positive.
  Specification: ∞ω

If no fault is detected in the wiring:

- Check engine control unit voltage supply => Page 123 .

2.5 - Checking intake manifold pressure sender

Note:

Only gold-plated contacts may be used when servicing the sender connector contacts

Special tools, workshop equipment, testers, measuring instruments and auxiliary items required

- Test box V.A.G 1598/22
- Hand multimeter V.A.G 1526 or multimeter V.A.G 1715

Protected by copyright. Copyright by Volkswagen AG. Volkswagen AG does not guarantee or accept any liability with respect to the correctness of information in this document. Copyright by Volkswagen AG. Reproduction, in whole or in part, is not permitted unless authorised by Volkswagen AG. Volkswagen AG does not guarantee or accept any liability with respect to the correctness of information in this document. Copyright by Volkswagen AG. Protected by copyright. Copying for private or commercial purposes, in part or in whole, is not permitted unless authorised by Volkswagen AG.
satelettronica

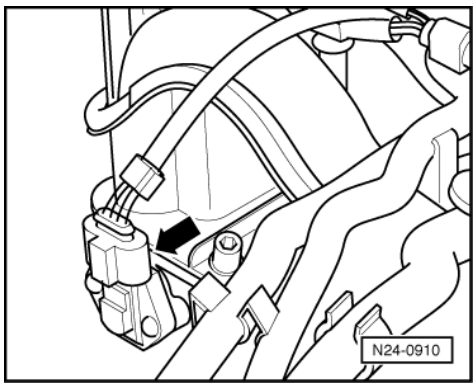

- Adapter set V.A.G 1594
- Current flow diagram

Test sequence

- -> Pull 4-pin connector off intake manifold pressure sender (G71) and intake air temperature sender (G42) -arrow-.

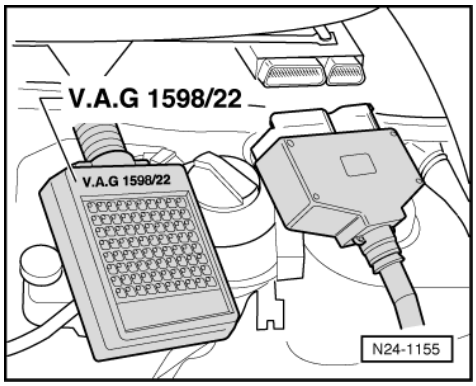

- Remove left plenum chamber cover.
- -> Connect test box V.A.G 1598/22 to control unit wiring harness.

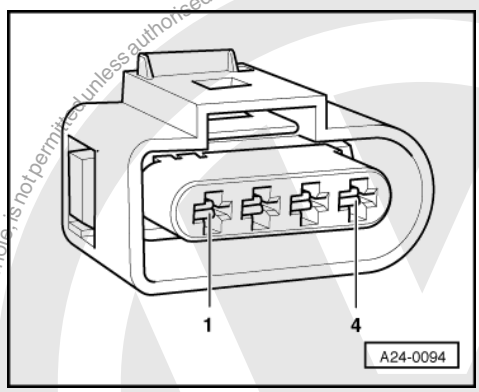

- -> Check wires between test box and 4-pin connector (connector to control unit) for open circuit using current flow diagram.
  Contact 3+socket 62
  Contact 4+socket 70
  Wire resistance: max. 1.5 ω
  Additionally check wires for short to one another, to vehicle earth and to battery positive.
  Specification: ∞ω

If no fault is detected in the wiring:

- Renew the intake manifold pressure sender (G71) with intake air temperature sender (G42)

satelettronica
Protected by copyright. Copyright by Volkswagen AG. Copyright by Volkswagen AG does not guarantee or accept any liability with respect to the correctness of information in this document. Copying for private or commercial purposes, in part or in whole, is not permitted unless authorised by Volkswagen AG.

=> Page 64 , item 15 .

2.6 - Checking intake air temperature sender

Note:

Only gold-plated contacts may be used when servicing the sender connector contacts

Special tools, workshop equipment, testers, measuring instruments and auxiliary items required

- Fault reader V.A.G 1551 or vehicle system tester V.A.G 1552 with cable V.A.G 1551/3A
- Test box V.A.G 1598/22
- Hand multimeter V.A.G 1526 or multimeter V.A.G 1715
- Adapter set V.A.G 1594
- Current flow diagram
- Chilling spray (commercially available)

Test sequence

- Connect the fault reader V.A.G 1551 (V.A.G 1552). Then switch ignition on and select engine control unit with the "Address word" 01.
  (Connecting fault reader and selecting engine control unit => Page 4 .)

-> Indicated on display:

```
Rapid data transfer      HELP
Select function XXX
```

- Press keys 0 and 8 for the function "Read measured value block" and confirm entry with Q key.

-> Indicated on display:

```
Read measured value block
Input display group number XXX
```

- Press keys 0, 0 and 4 for "Display group number 4" and confirm entry with Q key.

-> Indicated on display:
(1...4 = Display zones)

```
Read measured value block 4
     1      2      3      4
```

- Read off intake air temperature value in display zone 4.
- Perform check according to following table:

Display	Cause	Continuation of check
Approx. ambient temperature1)	---	=> Page 87
-40 °C	Open circuit or short to positive	=> Page 87
129 °C	Short to earth	=> Page 89

1) If a temperature is displayed which is below the ambient air temperature of the sender, check sender wiring for transfer resistances. Note when doing this that sender is heated from external sources, e.g. radiated heat when engine is not running.

Protected by copyright. Copying for private or commercial purposes, in part or in whole, is not permitted unless authorised by Volkswagen AG. Volkswagen AG does not guarantee or accept any liability with respect to the correctness of information in this document. Copyright by Volkswagen AG.

satelettronica

Continuation of check when display = ambient temperature:

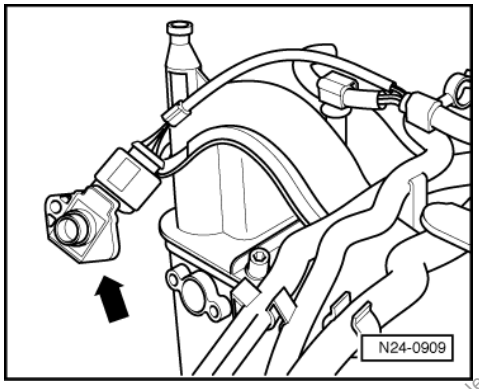

Functional check of sender

- -> Remove intake air temperature sender together with intake manifold pressure sender (connector remains connected).
- Note intake air temperature value in display zone 4.
- Spray sender with commercial chilling agent whilst observing the temperature value. The temperature value must
  decrease.
- Press ⇒key.
- Press keys 0 and 6 for the function "End output" and confirm entry with the Q key.
- Switch off ignition.

If the specification is not obtained:

- Renew the intake manifold pressure sender (G71) with intake air temperature sender (G42) => Page 64 , item 15 .

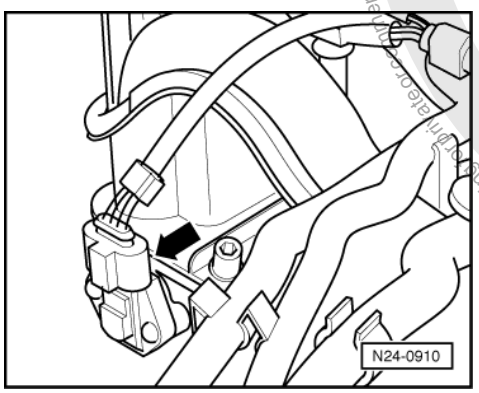

Continuation of check when display -40 °C:

- -> Pull 4 pin connector off intake air temperature sender (G42) with intake manifold pressure sender (G71) -arrow-.

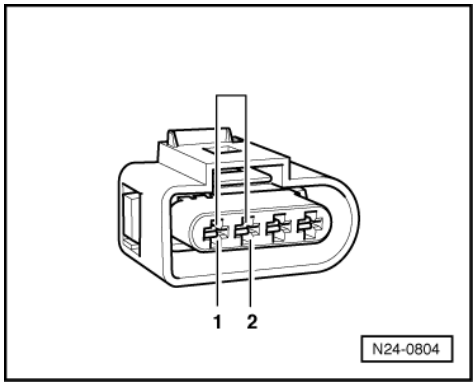

Protected by copyright. Copyright by Volkswagen AG.
Copyright by Volkswagen AG. Volkswagen AG does not guarantee or accept any liability with respect to the correctness of information in this document. Copying for private or commercial purposes, in part or in whole, is not permitted unless authorised by Volkswagen AG.
satelettronica

- -> Bridge connector contacts 1+2 using aux. cables from V.A.G 1594 and observe display.

Display jumps to 129 °C:

- Press ⇒key.
- Press keys 0 and 6 for the function "End output" and confirm entry with the Q key.
- Switch off ignition.
- Renew the intake manifold pressure sender (G71) with intake air temperature sender (G42)
  => Page 64 , item 15 .

If the display remains at -40 °C:

- Press ⇒key.

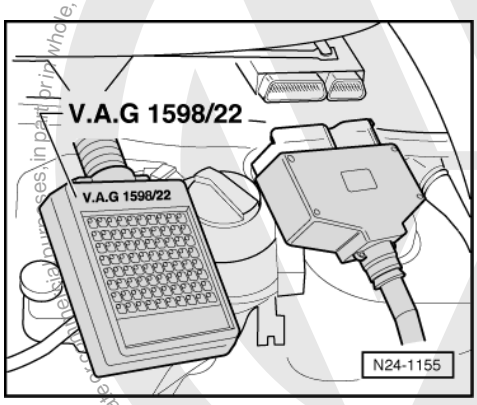

- Press keys 0 and 6 for the function "End output" and confirm entry with the Q key.
- Switch off ignition.
- Remove left plenum chamber cover.
- -> Connect test box V.A.G 1598/22 to control unit wiring harness.

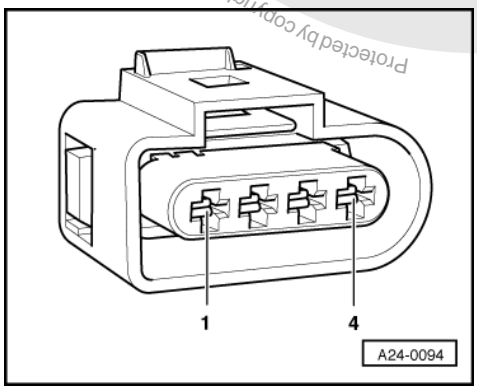

- -> Check wires between test box and 4-pin connector (connector to control unit) for open circuit using current flow diagram.
  Contact 1+socket 54
  Contact 2+socket 56
  Wire resistance: max. 1.5 ω
- Check wiring additionally for short circuit to battery positive.
  Specification: ∞ω

If no fault is detected in the wiring:

- Renew the intake manifold pressure sender (G71) with intake air temperature sender (G42)
  => Page 64 , item 15 .

Protected by copyright. Copyright by Volkswagen AG. Volkswagen AG does not guarantee or accept any liability with respect to the correctness of information in this document. Copyright by Volkswagen AG.
satelettronica

Continuation of check when display shows 129 °C:

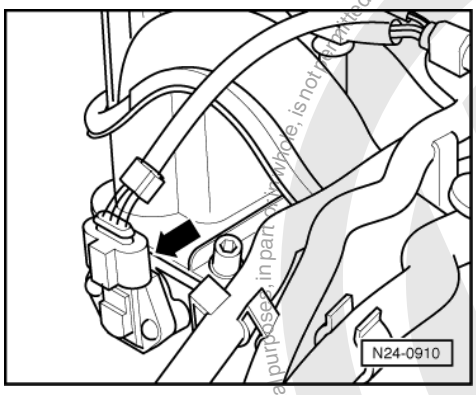

- -> Pull 4 pin connector off intake air temperature sender (G42) with intake manifold pressure sender (G71) -arrow-.

If the display jumps to -40 °C:

- Press ⇒key.
- Press keys 0 and 6 for the function "End output" and confirm entry with the Q key.
- Switch off ignition.
- Renew the intake manifold pressure sender (G71) with intake air temperature sender (G42) => Page 64 , item 15 .

If display remains at 129 °C:

- Press ⇒key.

- Press keys 0 and 6 for the function "End output" and confirm entry with the Q key.

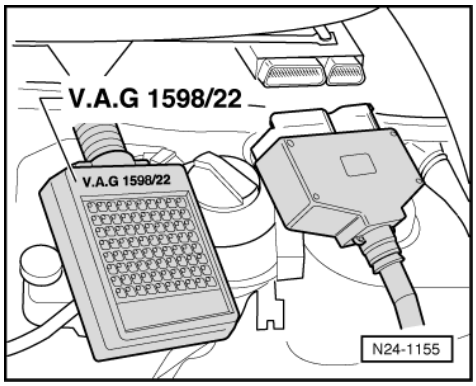

- Switch off ignition.
- Remove left plenum chamber cover.
- -> Connect test box V.A.G 1598/22 to control unit wiring harness.

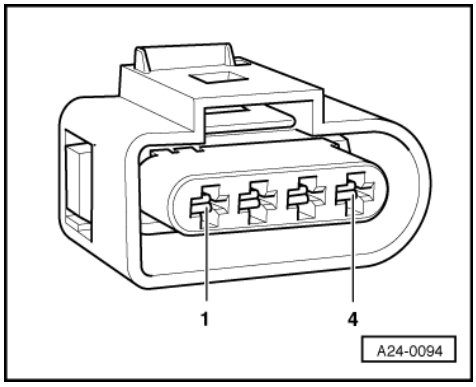

Protected by copyright. Copying for private or commercial purposes, in part or whole, is not permitted unless authorised by Volkswagen AG. Volkswagen AG does not guarantee or accept any liability with respect to the correctness of information in this document. Copyright by Volkswagen AG.
satelettronica

- -> Check wires between test box and 4-pin connector (connector to control unit) for open circuit using current flow diagram.
  Contact 1+socket 54
  Contact 2+socket 56
  Wire resistance: max. 1.5 ω
- Check wiring additionally for short circuit to battery positive.
  Specification: ∞ω

If no fault is detected in the wiring:

- Renew the intake manifold pressure sender (G71) with intake air temperature sender (G42) => Page 64 , item 15 .

2.7 - Checking coolant temperature sender

Special tools, workshop equipment, testers, measuring instruments and auxiliary items required

- Fault reader V.A.G 1551 or vehicle system tester V.A.G 1552 with cable V.A.G 1551/3A
- Test box V.A.G 1598/22
- Hand multimeter V.A.G 1526 or multimeter V.A.G 1715
- Adapter set V.A.G 1594
- Current flow diagram

Test conditions

- Engine must be cold.

Test sequence

- Connect the fault reader V.A.G 1551 (V.A.G 1552). Then switch ignition on and select engine control unit with the "Address word" 01.
  (Connecting fault reader and selecting engine control unit => Page 4 .)

-> Indicated on display:

```
Rapid data transfer      HELP
Select function XXX
```

- Press keys 0 and 8 for the function "Read measured value block" and confirm entry with Q key.

-> Indicated on display:

```
Read measured value block
Input display group number XXX
```

- Press keys 0, 0 and 4 for "Display group number 4" and confirm entry with Q key.

-> Indicated on display:
(1...4 = Display zones)

```
Read measured value block 4
     1      2      3      4
```

- Read off coolant temperature value in display zone 3.
- Perform check according to following table:

Display	Cause	Continuation of check
Approx. coolant temperature1)	---	Only if sporadic faults have been detected:2) => Page 91

satelettronica
Copyright by Volkswagen AG. Volkswagen AG does not guarantee or accept any liability with respect to the correctness of information in this document. Copyright by Volkswagen AG.
Protected by copyright. Copying for private or commercial purposes, in part or in whole, is not permitted unless authorised by Volkswagen AG.

Display	Cause	Continuation of check
-40 °C	Open circuit or short to positive	=> Page 92
129 °C	Short to earth	=> Page 93

1) If a temperature is displayed which deviates greatly from the ambient temperature of the sender, check sender wiring for transfer resistances.

2) Check is only possible when the engine is cold.

Continuation of check when display = coolant temperature:

Functional check of sender

- Connect fault reader V.A.G 1551 (V.A.G 1552). Start engine and select "Address word" 01 of engine control unit. When doing this the engine must be running at idling speed.
  (Connecting fault reader and selecting engine control unit => Page 4 .)

-> Indicated on display:

```
Rapid data transfer      HELP
Select function XXX
```

- Press keys 0 and 8 for the function "Read measured value block" and confirm entry with Q key.

-> Indicated on display:

```
Read measured value block
Input display group number XXX
```

- Press keys 0, 0 and 4 for "Display group number 4" and confirm entry with Q key.

-> Indicated on display:
(1...4 = Display zones)

```
Read measured value block 4
     1     2     3     4
```

- Observe coolant temperature value in display zone 3 with engine running. The temperature value must increase evenly without interruption.

Notes:

- Temperature increases in steps of 1.0 °C.
- If irregular engine running occurs in certain temperature ranges and the temperature figure does not increase without interruption, the temperature signal is temporarily interrupted and the sender must be renewed.

- Press ⇒key.
- Press keys 0 and 6 for the function "End output" and confirm entry with the Q key.
- Switch off ignition.

If the specification is not obtained:

- Remove air cleaner => Page 71 , Fig. 3 .
- Replace coolant temperature sender (G62) with coolant temperature gauge sender (G2) =>Page 60 , item 28 .

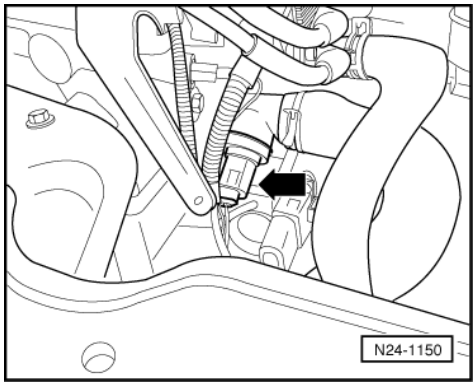

satelettronica
Copyright by Volkswagen AG. Volkswagen AG does not guarantee or accept any liability with respect to the correctness of information in this document. Copyright by Volkswagen AG. Copying for private or commercial purposes, in part or in whole, is not permitted unless authorised by Volkswagen AG.

Continuation of check when display shows -40 °C:

- Remove air cleaner => Page 71 , Fig. 3 .
- -> Pull the 4 pin connector off coolant temperature sender (G62) with coolant temperature gauge sender (G2) -arrow-.

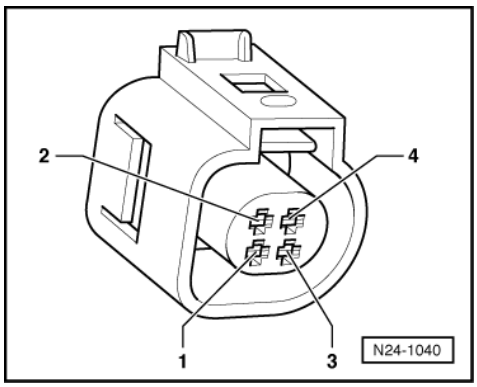

- -> Bridge connector contacts 3+4 using aux. cables from V.A.G 1594 and observe display.

Display jumps to 129 °C:

- Press ⇒key.
- Press keys 0 and 6 for the function "End output" and confirm entry with the Q key.
- Switch off ignition.
- Replace coolant temperature sender (G62) with coolant temperature gauge sender (G2) =>Page 60 , item 28 .

If the display remains at -40 °C:

- Press ⇒key.

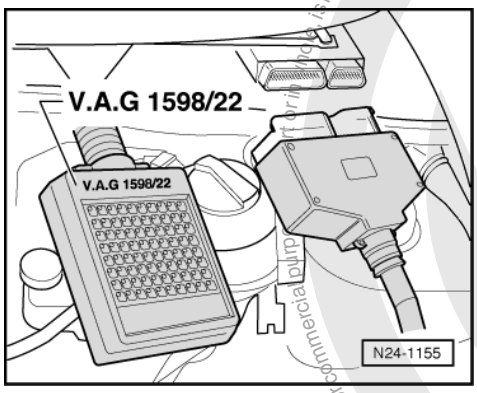

- Press keys 0 and 6 for the function "End output" and confirm entry with the Q key.
- Switch off ignition.
- Remove left plenum chamber cover.
- -> Connect test box V.A.G 1598/22 to control unit wiring harness.

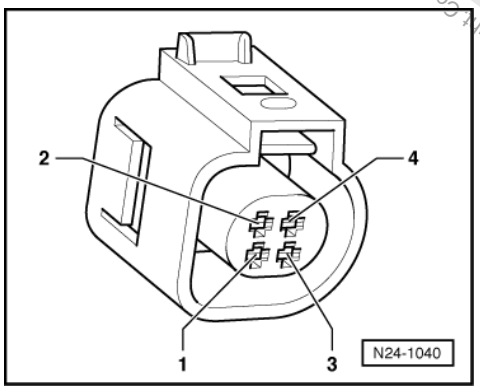

Protected by copyright. Copyright by Volkswagen AG. Volkswagen AG does not guarantee or accept any liability with respect to the correctness of information in this document. Copyright by Volkswagen AG. Reproduction or transfer to other media is not permitted unless authorised by Volkswagen AG.
satelettronica

- -> Check wires for open circuit between test box and 4-pin connector (connector to control unit) using current flow diagram.
  Contact 3+socket 74
  Contact 4+socket 54
  Wire resistance: max. 1.5 ω
- Check wiring additionally for short circuit to battery positive.
  Specification: ∞ω

If no fault is detected in the wiring:

- Replace coolant temperature sender (G62) with coolant temperature gauge sender (G2) =>Page 60 , item 28 .

Continuation of check when display shows 129 °C:

- Remove air cleaner => Page 71 , Fig. 3 .

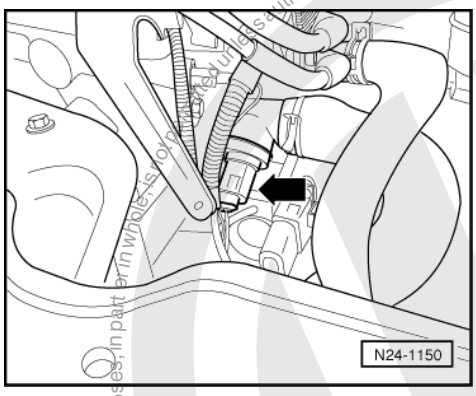

- -> Pull the 4 pin connector off coolant temperature sender (G62) with coolant temperature gauge sender (G2) -arrow-.

If the display jumps to -40 °C:

- Press ⇒key.
- Press keys 0 and 6 for the function "End output" and confirm entry with the Q key.
- Switch off ignition.
- Replace coolant temperature sender (G62) with coolant temperature gauge sender (G2) =>Page 60 , item 28 .

If display remains at 129 °C:

- Press ⇒key.

- Press keys 0 and 6 for the function "End output" and confirm entry with the Q key.

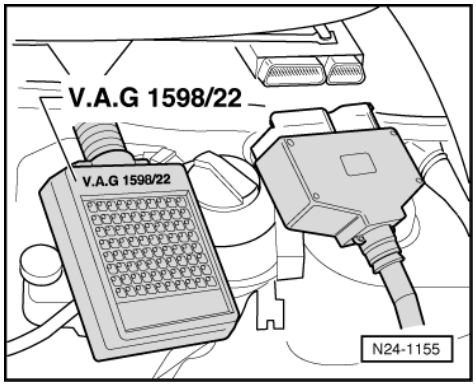

- Switch off ignition.
- Remove left plenum chamber cover.

Protected by copyright. Copying for private or commercial purposes, in part or in whole, is not permitted unless authorised by Volkswagen AG. Volkswagen AG does not guarantee or accept any liability with respect to the correctness of information in this document. Copyright by Volkswagen AG.
satelettronica

- -> Connect test box V.A.G 1598/22 to control unit wiring harness.

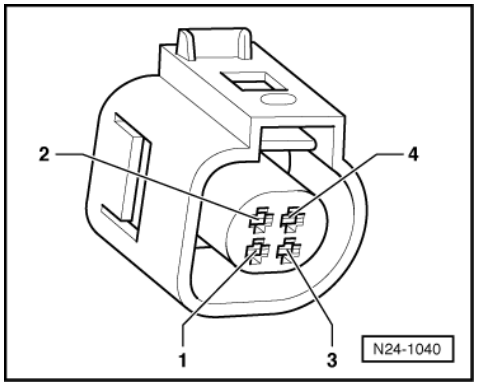

- -> Check wires for open circuit between test box and 4-pin connector (connector to control unit) using current flow diagram.
  Contact 3+socket 74
  Contact 4+socket 54
  Wire resistance: max. 1.5 ω
- Check wiring additionally for short circuit to battery positive.
  Specification: ∞ω

If no fault is detected in the wiring:

- Replace coolant temperature sender (G62) with coolant temperature gauge sender (G2) =>Page 60 , item 28 .

2.8 - Checking engine speed sender

The engine speed sender (G28) is a speed and reference mark sender. The engine will not start if there is no speed signal. If the speed signal fails when the engine is running, it will cause the engine to stall immediately.

Special tools, workshop equipment, testers, measuring instruments and auxiliary items required

- Test box V.A.G 1598/22
- Hand multimeter V.A.G 1526 or multimeter V.A.G 1715
- Adapter set V.A.G 1594
- Current flow diagram

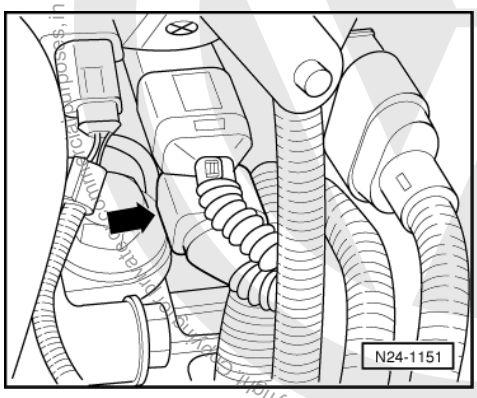

Test conditions

- The battery voltage must be at least 11.5 V.

Test sequence

- Remove air cleaner => Page 71 , Fig. 3 .

Protected by copyright. Copyright by Volkswagen AG.
Copyright by Volkswagen AG. Volkswagen AG does not guarantee or accept any liability with respect to the correctness of information in this document.
satelettronica

- -> Detach black 3-pin connector to engine speed sender -arrow- (on thermostat housing).

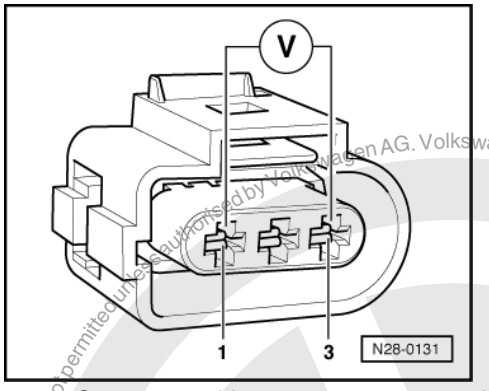

- -> Connect multimeter to measure voltage using aux. cables from V.A.G 1594 to contacts 1 (positive) and 3 (earth) on engine speed sender connector.
- Switch on ignition.
  Specification: min. 4.5 V
- Switch off ignition.

If no voltage is present:

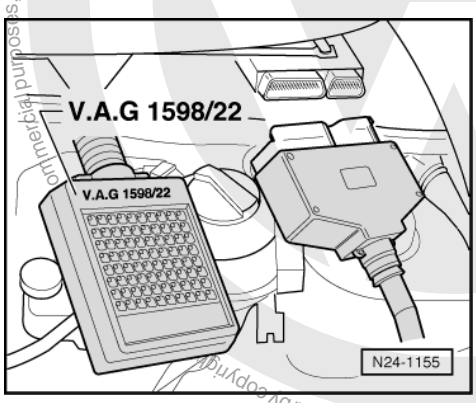

- Remove left plenum chamber cover.
- -> Connect test box V.A.G 1598/22 to control unit wiring harness.

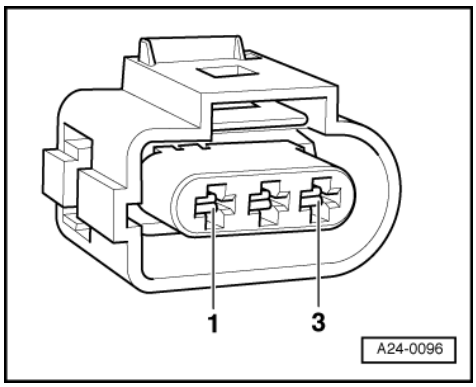

- -> Check wires between test box and 3-pin connector (connector to control unit) for open circuit using current flow diagram.
  Contact 1+socket 62
  Contact 2+socket 53
  Contact 3+socket 67
  Wire resistance: max. 1.5 ω

- Additionally check wires for short to one another.
  Specification: ∞ω

Copyright by Volkswagen AG. Volkswagen AG does not guarantee or accept any liability in respect to the correctness of information in this document. Copyright by Volkswagen AG. Not to be copied, in whole or in part, or for commercial purposes, unless authorised by Volkswagen AG.
satelettronica

If no wiring fault is detected and voltage was present between contacts 1+3:

- Replace engine speed sender (G28)
  =>Page 56 , item 17 .

If no wiring fault is detected and no voltage was present between contacts 1+3:

- Replace engine control unit
  => Page 125 .

2.9 - Checking injectors

Checking activation

Special tools, workshop equipment, testers, measuring instruments and auxiliary items required

- Test box V.A.G 1598/22
- Hand multimeter V.A.G 1526 or multimeter V.A.G 1715
- Diode test lamp V.A.G 1527
- Adapter set V.A.G 1594
- Current flow diagram

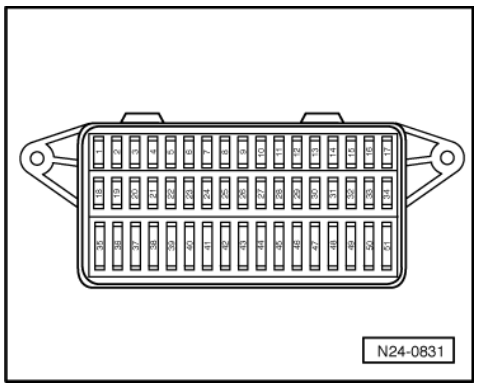

Check conditions

- -> Fuse No. 3 must be OK.
- Earth connection between engine (on gearbox bell housing) and body (below battery) OK.
- Earth connection in plenum chamber OK.
- The battery voltage must be at least 11.5 V.
- Engine speed sender must be OK, checking Page 94 .

- Hall sender must be OK, checking
  =>Page 143 .
- Fuel pump relay must be OK

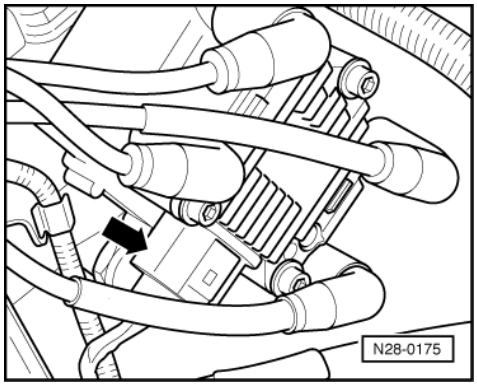

Protected by copyright. Copying for private or commercial purposes, in part or in whole, is not permitted unless authorised by Volkswagen AG. Volkswagen AG does not guarantee or accept any liability with respect to the correctness of information in this document. Copyright by Volkswagen AG.
satelettronica

Test sequence

- Remove air cleaner => Page 71 , Fig. 3 .
- -> Pull 4 pin connector off ignition transformer -arrow-.

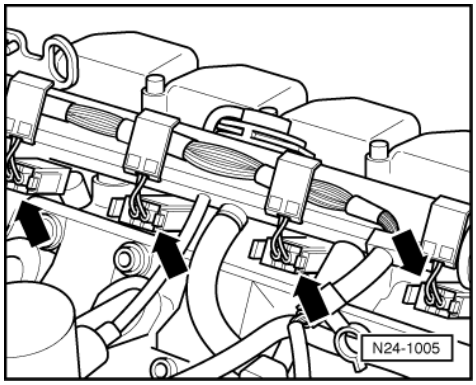

- -> Pull plug -arrows- off all injectors.

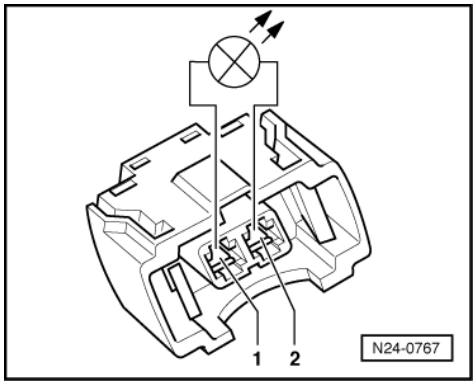

- -> Connect diode test lamp V.A.G 1527 using aux. cables from V.A.G 1594 to connector contacts of Cyl. 1.
- Operate the starter and check the voltage supply for No. 1 cylinder injector.
  The LED must light up
- Repeat check at the injector connectors for Cyls. 2...4.
- Switch off ignition.

If the LED does not light up on any cylinder:

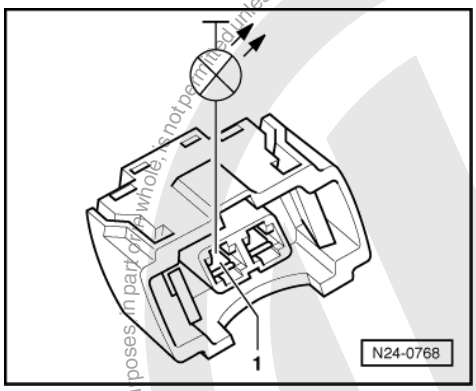

- -> Connect diode test lamp to Cyl. 1 connector, contact 1 and earth.
  The LED must light up
- Repeat check at the injector connectors for Cyls. 2...4.

If the LED does not light up:

- Switch off ignition.
- Check wire between 2 pin connector contact 1 and fuel pump relay (J17) for open circuit according to current flow diagram.

satelettronica
Protected by copyright. Copying for private or commercial purposes, in part or in whole, is not permitted unless authorised by Volkswagen AG. Volkswagen AG does not guarantee or accept any liability with respect to the correctness of information in this document. Copyright by Volkswagen AG.

Wire resistance: max. 1.5 ω

If the LED does not light up on one or several cylinders:

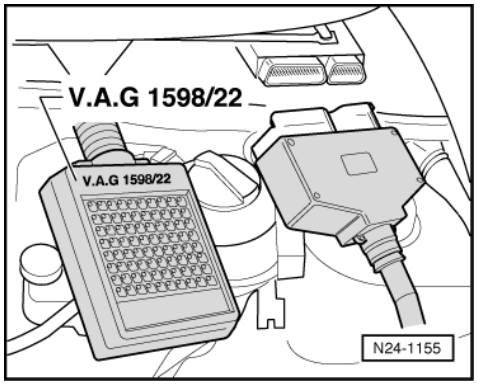

- Remove left plenum chamber cover.
- -> Connect test box V.A.G 1598/22 to control unit wiring harness.

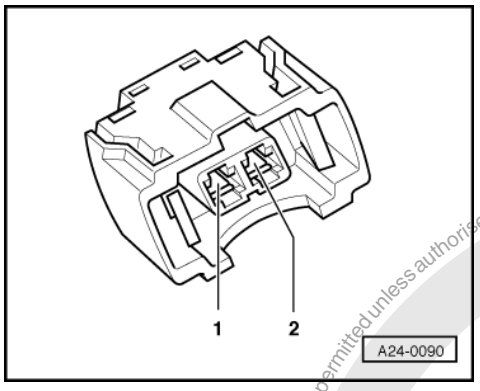

- -> Check wires between test box and 2-pin connectors for injectors (connector to control unit) for open circuit using current flow diagram.
  - Injector 1: contact 2+socket 79
  - Injector 2: contact 2+socket 59
  - Injector 3: contact 2+socket 73
  - Injector 4: contact 2+socket 65
  - Injector: max. 1.5 ω
- Additionally check wires for short to one another.
  - Specification: ∞ω
- Check wiring between connector contacts 1 of injectors for open circuit to one another.
  - Wire resistance: Max. 1.5 ω

Checking resistance of injectors

Test sequence

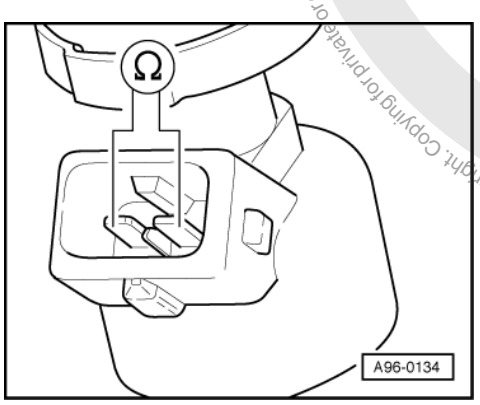

Protected by copyright. Copying for private or commercial purposes, in part or in whole, is not permitted unless authorised by Volkswagen AG. Volkswagen AG does not guarantee or accept any liability with respect to the correctness of information in this document. Copyright by Volkswagen AG.
satelettronica

- -> Check resistance of injectors between contacts.
  Specification: 12...17 ω

Note:

The resistance figures are valid for approx. 20 °C. At higher temperatures the resistance figures will increase.

If the specification is not attained:

- Renew defective injector
  Page 66 , item 9 .

Perform installation of injectors in reverse order. When doing this note the following:

- Renew O-rings on all injectors and lightly moisten with clean engine oil.
- Insert injectors vertically and in the correct position into the fuel rail and secure with retaining clips.
- With injectors secured to fuel rail, fit fuel rail on cylinder head and press in evenly.

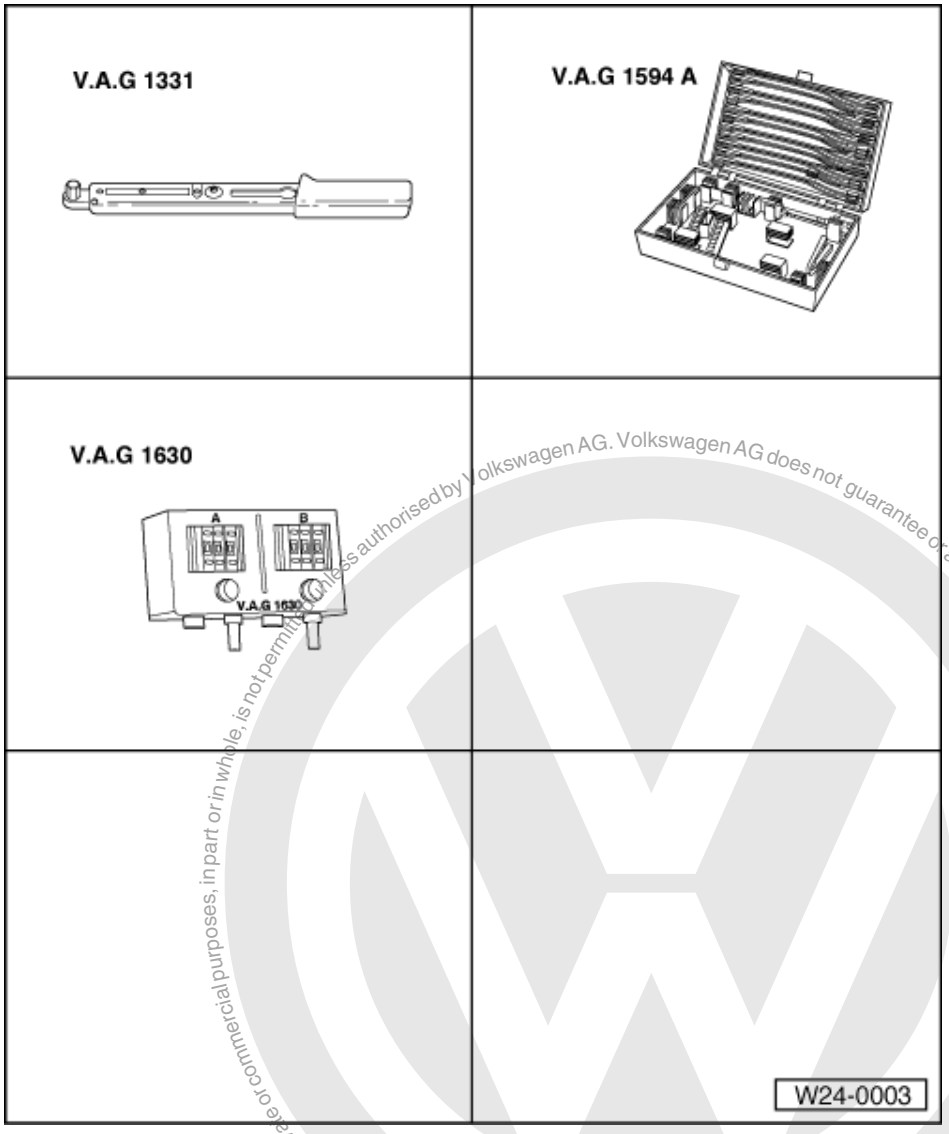

Checking spray pattern and for leaks

Special tools, workshop equipment, test and measuring appliances and auxiliary items required

Protected by copyright. Copying for private or commercial purposes, in part or in whole, is not permitted unless authorised by Volkswagen AG. Volkswagen AG does not guarantee or accept any liability with respect to the correctness of information in this document. Copyright by Volkswagen AG.
satelettronica

- V.A.G 1331 Torque wrench (5...50 Nm)
- V.A.G 1594 A Adapter set
- V.A.G 1630 Digital potentiometer
- Measuring container

Test conditions

- The fuel pressure must be in order, checking
  => Page 102 , checking fuel pressure regulator and holding pressure.

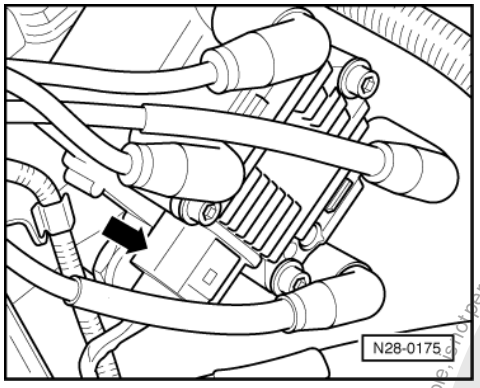

Test sequence

- Remove air cleaner => Page 71 , Fig. 3 .
- -> Pull 4 pin connector off ignition transformer -arrow-.

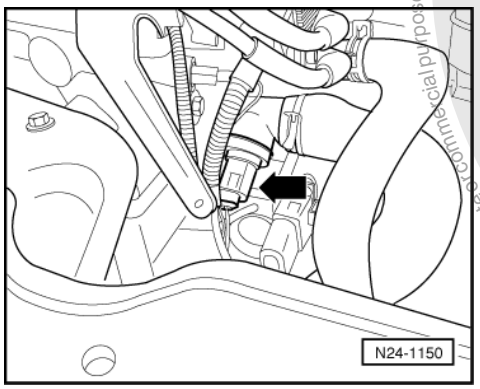

- -> Pull the 4 pin connector off coolant temperature sender (G62) with coolant temperature gauge sender (G2) -arrow-.

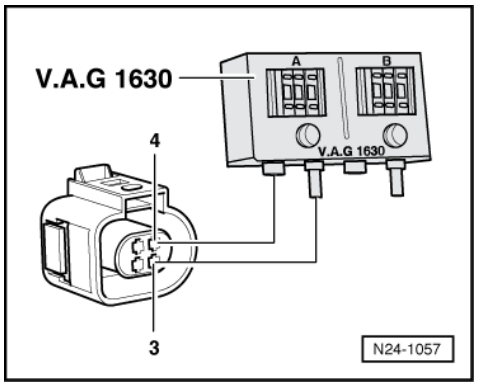

- -> Connect digital potentiometer V.A.G 1630 using adapter cables from V.A.G 1594 to contacts 3+4 of connector and set connected side to 15 kω.

Copyright by Volkswagen. Copying for private or commercial purposes, in part or in whole, is not permitted unless authorised by Volkswagen AG. Volkswagen AG does not guarantee or accept any liability with respect to the correctness of information in this document.
satelettronica

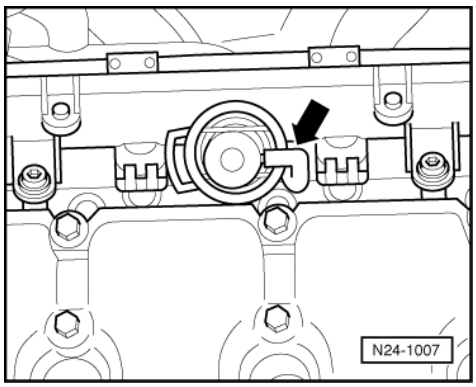

- -> Pull the vacuum hose off fuel pressure regulator -arrow-.
- Unclip injector wiring harness on fuel rail.
- Remove fuel rail complete with injectors from cylinder head (fuel hoses remain connected)
  => Page 56 , item 11 .

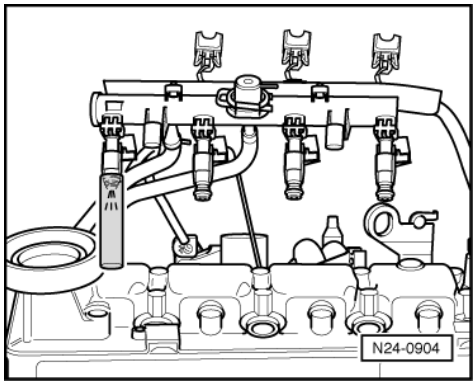

- -> Hold a small container under the injector to be checked and pull connectors off all other injectors.
- Have 2nd person operate starter. Injector must spray in pulses.
- Repeat check with other injectors ensuring that injector to be checked is only connected.
- Switch off ignition and afterwards check injectors for leaks. No more than
  2 drops/min
  may leak from each injector.

If the fuel loss is greater:

- Switch off ignition.
  Renew defective injector
  Page 66 , item 9 .

Perform installation of injectors in reverse order. When doing this note the following:

- Renew O-rings on all injectors and lightly moisten with clean engine oil.
- Insert injectors vertically and in the correct position into the fuel rail and secure with retaining clips.
- With injectors secured to fuel rail, fit fuel rail on cylinder head and press in evenly.

Protected by copyright. Copying for private or commercial purposes, in part or in whole, is not permitted unless authorised by Volkswagen AG. Volkswagen AG does not guarantee or accept any liability with respect to the correctness of information in this document. Copyright by Volkswagen AG.
satelettronica

2.10 - Checking fuel pressure regulator and holding pressure

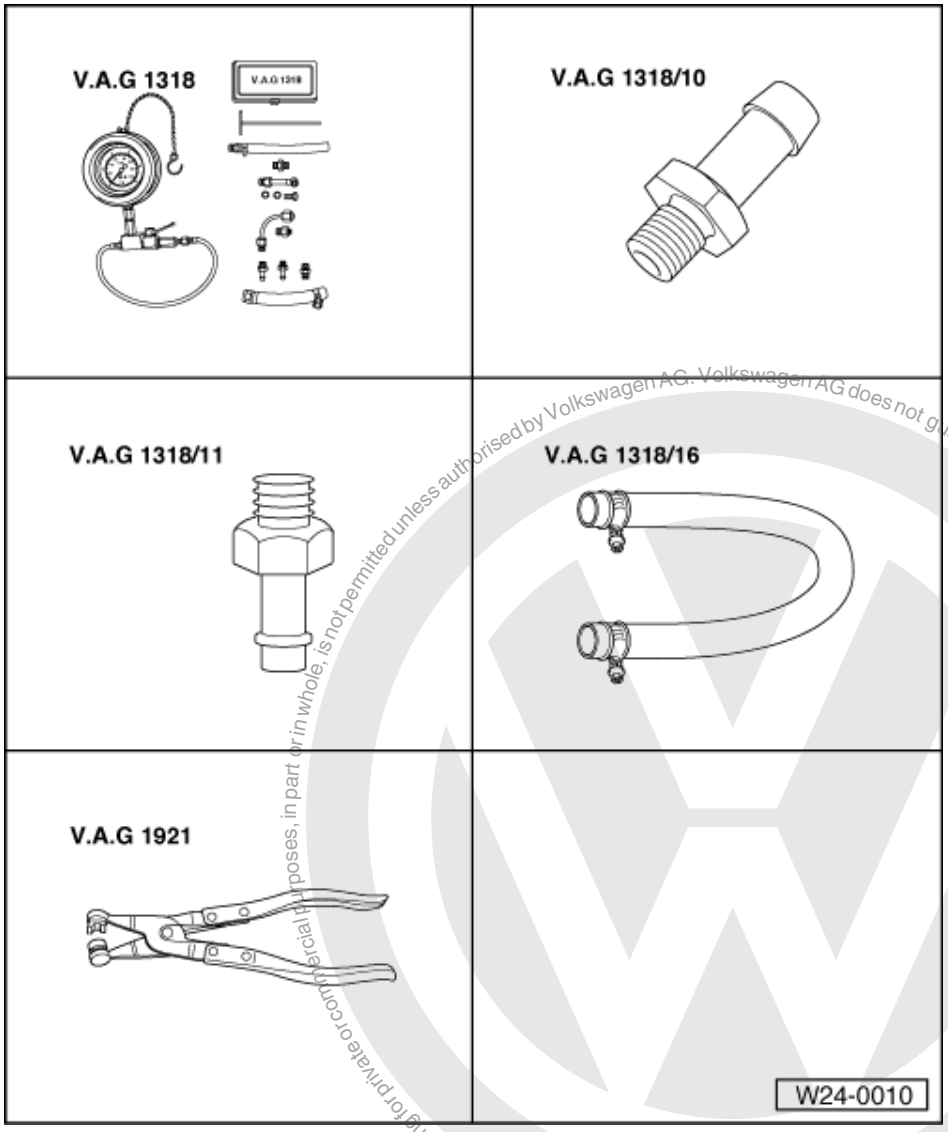

Protected by copyright. Copying for private or commercial purposes, in part or in whole, is not permitted unless authorised by Volkswagen AG. Volkswagen AG does not guarantee or accept any liability with respect to the correctness of information in this document. Copyright by Volkswagen AG.

The fuel pressure regulator regulates the fuel pressure depending on intake manifold pressure.

The specification for the check is dependent upon the working pressure of the fuel pump. This is

approx. 3.0 bar

Special tools, workshop equipment, test and measuring appliances and auxiliary items required

- V.A.G 1318 Pressure gauge
- V.A.G 1318/10 Adapter
- V.A.G 1318/11 Adapter
- V.A.G 1318/16 Hose adapter
- V.A.G 1921 Spring-type clip pliers

satelettronica

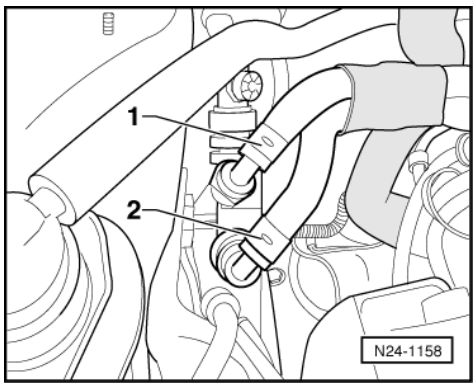

Test sequence

- Pull fuel pump fuse No. 40 out of fuse holder.
- Remove air cleaner => Page 71 , Fig. 3 .
- -> Pull off supply pipe/hose -1- (with white marking) and collect fuel that leaks out with a cloth.

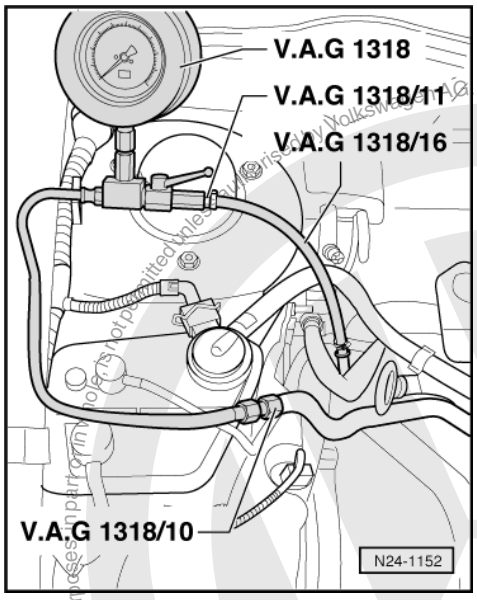

Warning!
Fuel supply lines are under pressure! Before removing from hose connection wrap a cloth around the connection. Then release pressure by carefully pulling hose off connection.

- -> Connect pressure gauge V.A.G 1318 with adapter V.A.G 1318/10 to supply hose -1- and with adapter V.A.G 1318/11 and hose adapter V.A.G 1318/16 to supply pipe.
- Open shut-off tap on pressure gauge. The handle points in direction of flow.

- Insert fuel pump fuse No. 40 into fuse holder.
- Start the engine and run at idling speed.
- Measure fuel pressure.
  Specification: Approx. 2.5 bar

satelettronica

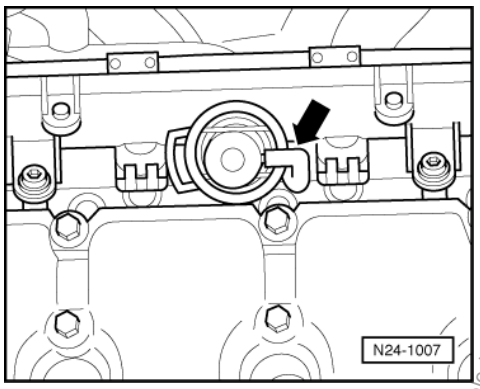

- -> Pull vacuum hose off fuel pressure regulator -arrow-. The fuel pressure must increase to approx. 3.0 bar.
- Switch off ignition.

If the specification is not obtained:

- Check quantity supplied by fuel pump.

=> Rep. Gr. 20; Removing and installing parts of fuel system; checking fuel pump

If the specification is obtained:

- Check for leaks and holding pressure by observing pressure drop on gauge. After 10 minutes there must be a residual pressure of at least 2.0 bar.

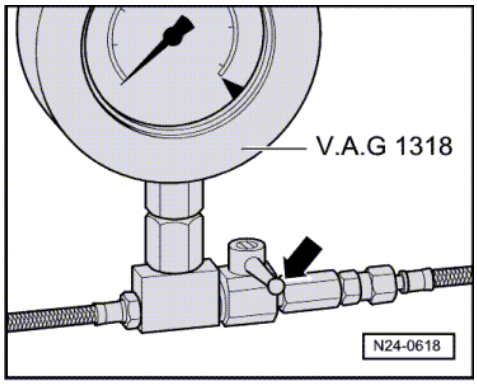

If the holding pressure drops below 2 bar:

- Start the engine and run at idling speed.
- -> Switch ignition off after the pressure has built-up. At the same time close pressure measured device cut-off tap (handle cross through-flow direction -arrow-).
- Observe pressure drop on gauge.

If the pressure does not drop:

Protected by copyright. Copying for private or commercial purposes, in part or in whole, is not permitted unless authorised by Volkswagen AG. Volkswagen AG does not guarantee or accept any liability with respect to the correctness of information in this document. Copyright by Volkswagen AG.
satelettronica

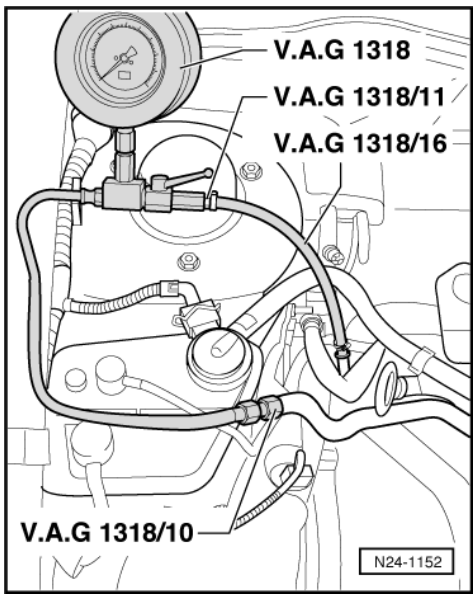

- Check fuel pump non-return valve.

=> Rep. Gr. 20; Removing and installing parts of fuel system; checking fuel pump

If the pressure drops again:

- -> Open pressure gauge V.A.G 1318 shut-off tap (handle in direction of flow).
- Start the engine and run at idling speed.

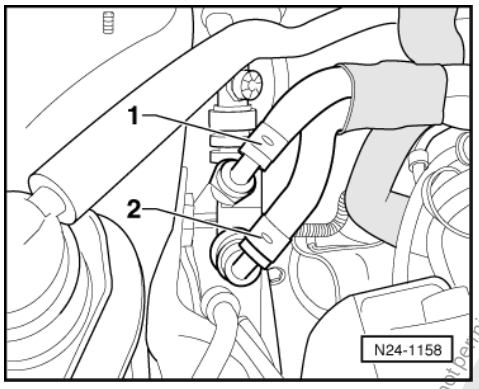

- -> Switch ignition off after the pressure has build-up. At the same time clamp-off the return hose (with blue marking) -2-.

If the pressure does not drop:

- Renew fuel pressure regulator
  =>Page 65 , item 5 .

If the pressure drops again:

- Check pipe connections, O-rings on fuel manifold and injectors for leaks.
- Check pressure gauge for leaks.

Note:

Before removing pressure gauge place a cloth around the connections to be loosened.

satelettronica
Protected by copyright. Copying for private or commercial purposes, in part or in whole, is not permitted unless authorised by Volkswagen AG. Volkswagen AG does not guarantee or accept any liability with respect to the correctness of information in this document. Copyright by Volkswagen AG.

2.11 - Checking intake air system for leaks (unmetered air)

Checking with engine leak detector spray G 001 800 A1

Notes:

- The vacuum in the intake system will cause the leak detector spray to be drawn in with the unmetered air. The leak detector spray reduces the ignitability of the mixture. This leads to a drop in engine speed and to a change of Lambda probe reading.
- The safety precautions listed on the container must be adhered to.

Special tools, workshop equipment, testers, measuring instruments and auxiliary items required

- Fault reader V.A.G 1551 or vehicle system tester V.A.G 1552 with cable V.A.G 1551/3A
- Engine leak detector spray G 001 800 A1

Test conditions

- Coolant temperature must be at least 80 °C, =>display group 04, display zone 3.

Test sequence

- Remove air cleaner => Page 71 , Fig. 3 .
- Connect fault reader V.A.G 1551 (V.A.G 1552). Start engine and select "Address word" 01 of engine control unit. When doing this the engine must be running at idling speed.
  (Connecting fault reader and selecting engine control unit => Page 4 .)

-> Indicated on display:

```
Rapid data transfer      HELP
Select function XXX
```

- Press keys 0 and 8 for the function "Read measured value block" and confirm entry with Q key.

-> Indicated on display:

```
Read measured value block
Input display group number XXX
```

- Press keys 0, 0 and 1 for "Display group number 1" and confirm entry with Q key.

-> Indicated on display:
(1...4 = Display zones)

```
Read measured value block     1
     1     2     3     4
```

Only continue with the test when

- The coolant temperature exceeds 80 °C
  -display zone 2-

- Observe the engine speed in display zone 1 and the Lambda regulation in display zone 3.
- Systematically spray parts of the intake system with engine leak detector spray.

If the engine speed drops or the Lambda regulator changes:

- Press ⇒key.
- Press keys 0 and 6 for the function "End output" and confirm entry with the Q key.
- Switch off ignition.
- Check sprayed areas of intake system for leaks and rectify if necessary.

If the engine speed or Lambda regulator does not change:

- Press ⇒key.
- Press keys 0 and 6 for the function "End output" and confirm entry with the Q key.

Protected by copyright. Copyright by Volkswagen AG. Volkswagen AG does not guarantee or accept any liability with respect to the correctness of information in this document. Copyright by Volkswagen AG.
satelettronica

- Switch off ignition.

2.12 - Checking intake air preheating

Special tools, workshop equipment, testers, measuring instruments and auxiliary items required

- Chilling spray (commercially available)

Checking regulating flap

- Remove air cleaner => Page 71 , Fig. 3 .

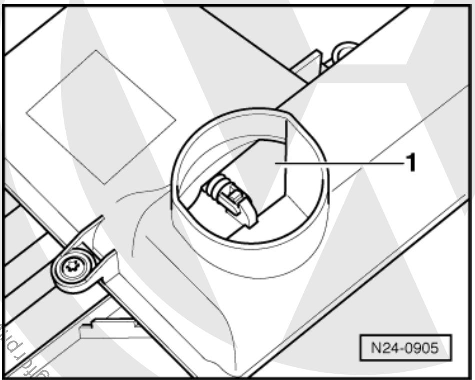

- -> Check control flap position -1-.
  - Above +23 °C flap must close warm air connection
  - Below +10 °C flap opens warm air connection

Note:

The function of the thermo-element can be checked easily by spraying it with a commercial chilling agent, to do this the air intake housing must be removed => Page 68 , Dismantling and assembling air cleaner.

2.13 - Checking vacuum valve

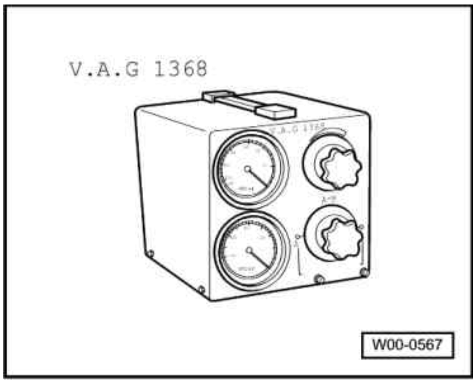

Special tools, workshop equipment, testers, measuring instruments and auxiliary items required

- -> V.A.G 1368 Vacuum tester

Protected by copyright. Copying for private or commercial purposes, in part or in whole, is not permitted unless authorised by Volkswagen AG. Volkswagen AG does not guarantee or accept any liability with respect to the correctness of information in this document. Copyright by Volkswagen AG.

satelettronica

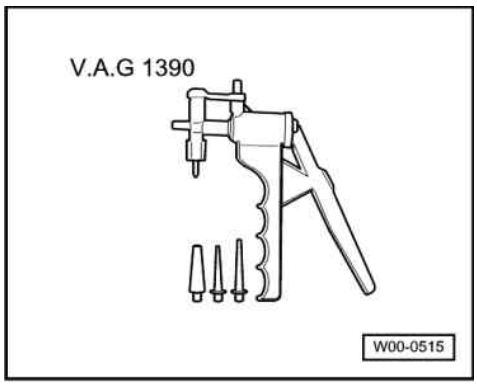

◆ -> V.A.G 1390 Hand vacuum pump

Test conditions

- Ignition must be switched off

Test sequence

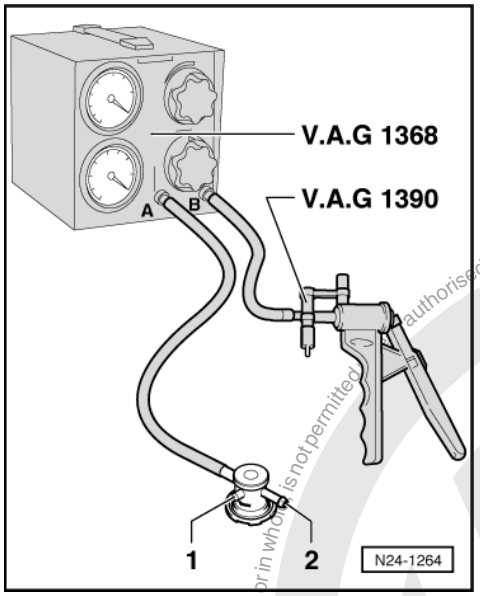

- Remove air cleaner => Page 71 , Fig. 3 .
- -> Remove vacuum valve -1- => Page 62 , item 3.
- Then connect hand vacuum pump V.A.G 1390 and vacuum tester V.A.G 1368 as shown (arrow on vacuum valve -1- points to V.A.G 1368).
- Set vacuum tester to -A/B- position.
- Operate hand vacuum pump V.A.G 1390 several times.
  Vacuum must not build up.

Note:

The vacuum valve is open in the rest position.

If vacuum builds up:

- Renew vacuum valve.

If vacuum does not build up:

Protected by copyright. Copying for private or commercial purposes, in part or in whole, is not permitted unless authorised by Volkswagen AG. Volkswagen AG does not guarantee or accept any liability with respect to the correctness of information in this document. Copyright by Volkswagen AG.
satelettronica

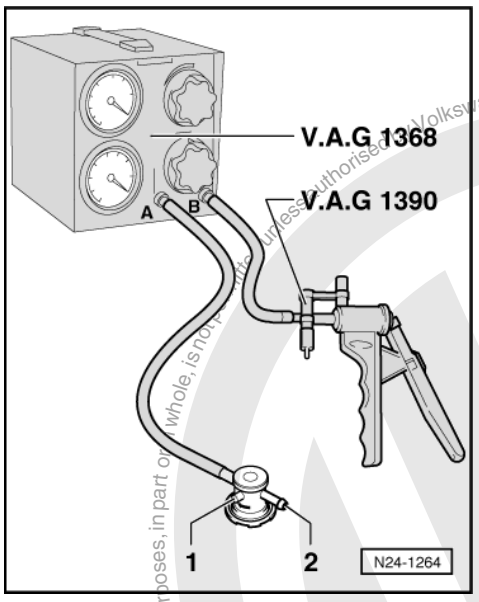

- -> Close connection -2- on vacuum valve.
- Hold vacuum valve in the hand.
- Operate V.A.G 1390 several times, until the valve closes with a noticeable click.

Note:

The vacuum valve closes at a vacuum between 250...350 mbar.

If vacuum valve does not close:

- Renew vacuum valve.

Protected by copyright. Copying for private or commercial purposes, in part or in whole, is not permitted unless authorised by Volkswagen AG. Volkswagen AG does not guarantee or accept any liability with respect to the correctness of information in this document. Copyright by Volkswagen AG.

3 - Checking functions

3.1 - Checking functions

3.2 - Idling check

Notes:

- Idling speed, ignition timing and CO content not adjustable.
- The idling speed is regulated to specification by the throttle valve positioner in conjunction with the DIS function.
- CO content regulated by Lambda regulation. Faults in Lambda control are detected in self-diagnosis and stored in fault memory.

Special tools, workshop equipment, testers, measuring instruments and auxiliary items required

- Fault reader V.A.G 1551 or vehicle system tester V.A.G 1552 with cable V.A.G 1551/3A

Check conditions

- Exhaust system between cylinder head and catalyst free of leaks
- All electrical consumers, e.g. lights and rear window heating must be switched off

satelettronica

Protected by copyright. Copying for private or commercial purposes, in any form and by any means, is not permitted without the express authorised by Volkswagen AG. Volkswagen AG does not guarantee or assume any liability with respect to the correctness of information in this document. Copyright by Volkswagen AG.

- If the vehicle is equipped with an air conditioning system, this must be switched off.
- Coolant temperature must be at least 80 °C, =>display group 04, display zone 3.

Test sequence

- Connect fault reader V.A.G 1551 (V.A.G 1552). Start engine and select "Address word" 01 of engine control unit. When doing this the engine must be running at idling speed.
  (Connecting fault reader and selecting engine control unit => Page 4 .)
- Interrogate fault memory, if necessary, repair fault and then erase fault memory.
  => Page 7 , interrogating and erasing fault memory
- Then:
  - Leave fault reader V.A.G 1551 connected.
  - Continue running engine at idling speed.

-> Indicated on display:

```
Rapid data transfer      HELP
Select function XXX
```

- Press keys 0 and 4 for the function "Initiating basic settings" and confirm entry with Q key.

-> Indicated on display:

```
Basic setting
Input display group number XXX
```

- Press keys 0, 0 and 1 for "Display group number 1" and confirm entry with Q key.

-> Indicated on display:
(1...4 = Display zones)

```
System in basic setting      1
     1     2     3     4
```

Note:

In the "System in basic setting" function the tank venting valve (N80) is closed and the air conditioner compressor switched off.

- Check the adjustment conditions for basic setting in display zone 4:
  Specification: 1x111111
  Significance of the numbers => Page 31
- Briefly increase engine speed (rev- up) and then allow engine to run at idling speed for 2 minutes.

Checking idling speed

- Change to display group 56 as follows:
- Press C key.
- Press keys 0, 5 and 6 for "Display group number 56" and confirm entry with Q key.

-> Indicated on display:
(1...4 = Display zones)

```
System in basic setting      56
     1     2     3     4
```

- Check operating modes in display zone 4
  Specification: x x 0 x 0
  (Significance => Page 44)
- Check specified idling speed in display zone 2.
  Specification: 850 rpm
- Check idling speed in display zone 1.
  Specification: 810...900 rpm1)

1) Up-to-date specifications:

satelettronica

=> Exhaust emissions test binder

Note:

During the idling check the tank venting valve (N80) and the air conditioner are switched off and the Lambda regulation learning process is initiated.

- Press ⇒key.
- Press keys 0 and 6 for the function "End output" and confirm entry with the Q key.

If the idling speed is not obtained:

- Adapt the engine control unit to the throttle valve control part => Page 127
- Carry out test drive.

Observe the valid safety precautions when carrying out a road test => Page 72 .

- Again interrogate the control unit fault memory.
- Repeat the idling check.

If the specifications are not obtained again:

- Check throttle valve control part => Page 81 .
- Check the operating condition of engine => Page 121 .
- Check intake air system for unmetered air => Page 106
- Check the signals from/to air conditioner => Page 132 .

3.3 - Checking Lambda probe and Lambda regulation before catalyst

Special tools, workshop equipment, testers, measuring instruments and auxiliary items required

- ◆ Fault reader V.A.G 1551 or vehicle system tester V.A.G 1552 with cable V.A.G 1551/3A
- ◆ Test box V.A.G 1598/22
- ◆ Hand multimeter V.A.G 1526 or multimeter V.A.G 1715
- ◆ Adapter set V.A.G 1594
- ◆ Current flow diagram

Check conditions

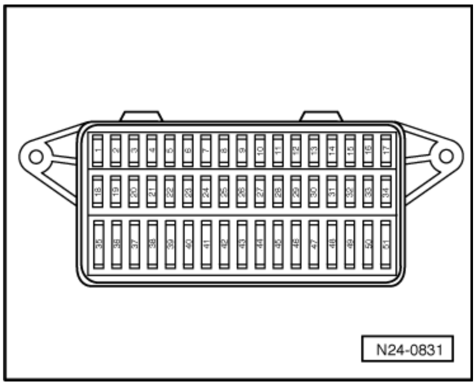

- -> Fuse No. 1 must be OK.
- The battery voltage must be at least 11.5 V.
- Exhaust system between catalyst and cylinder head must be free of leaks
- Coolant temperature must be at least 80 °C, =>display group 04, display zone 3.

Protected by copyright. Copying for private or commercial purposes, in part or in whole, is not permitted unless authorised by Volkswagen AG. Volkswagen AG does not guarantee or accept any liability with respect to the correctness of information in this document. Copyright by Volkswagen AG.
satelettronica

Functional check

- Connect fault reader V.A.G 1551 (V.A.G 1552). Start engine and select "Address word" 01 of engine control unit. When doing this the engine must be running at idling speed.
  (Connecting fault reader and selecting engine control unit => Page 4 .)

-> Indicated on display:

```
Rapid data transfer      HELP
Select function XXX
```

- Press keys 0 and 8 for the function "Read measured value block" and confirm entry with Q key.

-> Indicated on display:

```
Read measured value block
Input display group number XXX
```

- Press keys 0, 3 and 0 for the "Display group number 30" and confirm entry with Q key.

-> Indicated on display:
(1...2 = Display zones)

```
Read measured value block 30
     1     2
```

- Check Lambda control status before catalyst (display zone 1):
  Specification: 1 1 1
  (Significance => Page 39)

Notes:

- The first position of the 3 digit number block fluctuates between 0 and 1 (Lambda probe heating on and off).
- Depending upon the status of the Lambda control the 3 digit number block can show 0 or 1.
- The bits in display zone 1 will not be set to 1 until the catalyst temperature has exceeded 400.0 °C (=> display group 34, display zone 2).

If the specification is not obtained:

- Check the Lambda probe heating before catalyst
  => Page 74 .

If the specification is obtained:

- Change to display group 32 as follows:
- Press C key.

- Press keys 0, 3 and 2 for "Display group number 32" and confirm entry with Q key.

-> Indicated on display:
(1...2 = Display zones)

```
Read measured value block     32
     1     2
```

- Check Lambda learnt values at idling speed (additive) in display zone 1.
  Specification: -10.0...10.0 %
- Check Lambda learnt values at part load (multiplicative) in display zone 2.
  Specification: -10.0...10.0 %

If the specifications are not obtained:

- =>Page 40 , Evaluating display group 32

If the specifications are obtained:

- Change to display group 33 as follows:
  V.A.G 1551: Press key 3

Protected by copyright. Copyright by Volkswagen AG. Copying for private or commercial purposes, in part or in whole, is not permitted unless authorised by Volkswagen AG. Volkswagen AG does not guarantee or accept any liability with respect to the correctness of information in this document.
satelettronica

V.A.G 1552: Press key ↑

-> Indicated on display:
(1...2 = Display zones)

```
Read measured value block      33
     1      2
```

- Observe Lambda regulation in display zone 1. The display must fluctuate at least 2 % in the range -10.0...10.0 %
- Press ⇒key.

- Press keys 0 and 6 for the function "End output" and confirm entry with the Q key.
- Switch off ignition.

If the Lambda regulation does not fluctuate in display zone 1:
- Check Lambda probe wiring for Lambda probe 1 => Page 113 .

  Engine codes ANW, AUD => Page 113 .
  Engine codes AKK => Page 114 .

If the Lambda regulation in display zone 1 does not fluctuate as stated:
- Carry out road test and burn Lambda probes clean and repeat check.

Observe the valid safety precautions when carrying out a road test => Page 72 .

Only engine codes ANW, AUD

If the the specifications in display zone 1 are not obtained even after a test drive, or the value does not fluctuate by at least 2 %:
- Check ageing of the Lambda probe before catalyst =>Page 120 .

Check Lambda probe wiring Lambda probe 1

Only engine codes ANW, AUD

Engine codes AKK => Page 114 .

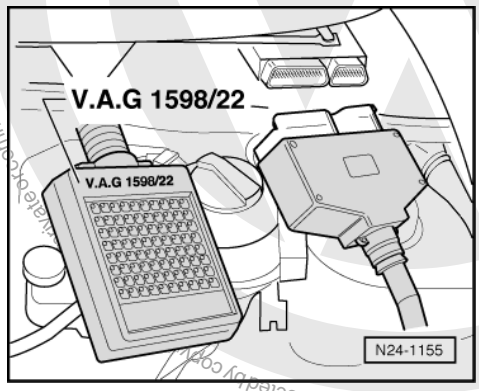

- Remove left plenum chamber cover.
- -> Connect test box V.A.G 1598/22 to control unit wiring harness.

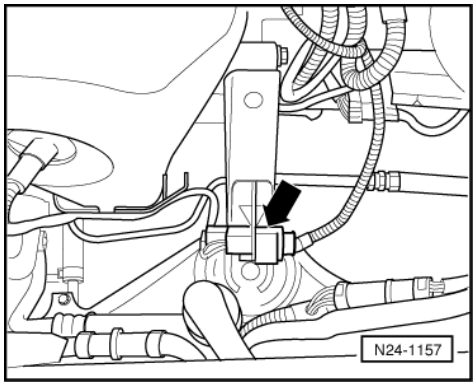

satelettronica

- -> Separate 6-pin connector (black) to Lambda probe before catalyst (G39) -arrow-.

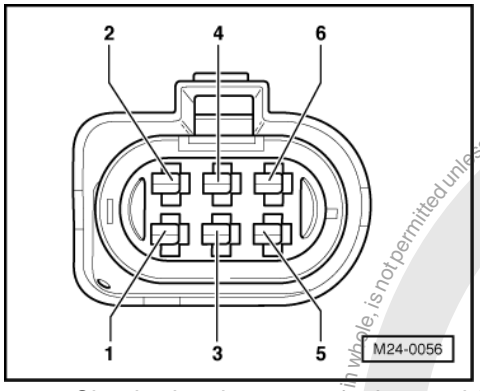

- -> Check wires between test box and 6-pin connector (connector to control unit) for open circuit using current flow diagram.
  Contact 1+socket 46
  Contact 2+socket 34
  Contact 5+socket 20
  Contact 6+socket 35
  Wire resistance: max. 1.5 ω
- Additionally check wires all for short to one another.
  Specification: ∞ω

If no fault is detected in the wiring:

- Renew Lambda probe before catalyst (G39)
  =>Page 58 , item 20 .

Check Lambda probe wiring Lambda probe 1

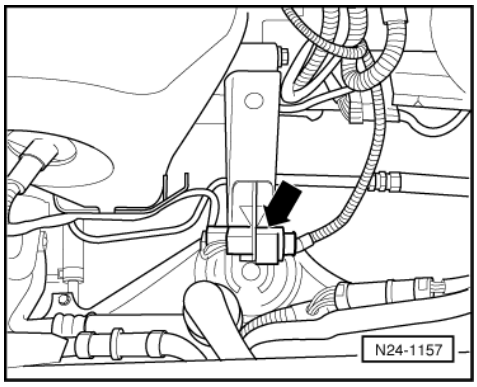

Only engine code AKK

- -> Separate the 4-pin connector (black) to Lambda probe before catalyst (G39) -arrow-.

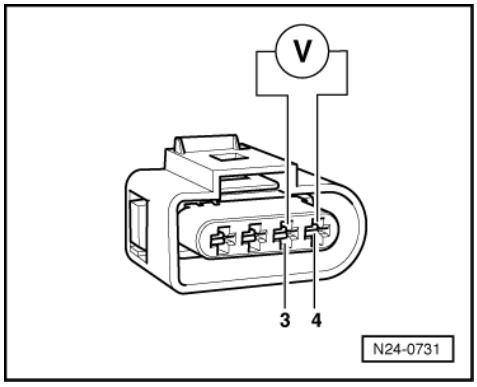

Protected by copyright. Copying for private or commercial purposes, in part or in whole, is not permitted unless authorised by Volkswagen AG. Volkswagen AG does not guarantee or accept any liability with respect to the correctness of information in this document. Copyright by Volkswagen AG.
satelettronica

- -> Connect multimeter with aux. cables from V.A.G 1594 to measure voltage at contacts 3+4 (connector to engine control unit).
- Switch on ignition and measure basic voltage.
  Specification: 0.040...0.050 V
- Switch off ignition.

If the specification is obtained:

- Renew Lambda probe before catalyst (G39)
  =>Page 58 , item 20 .

If the specification is not obtained:

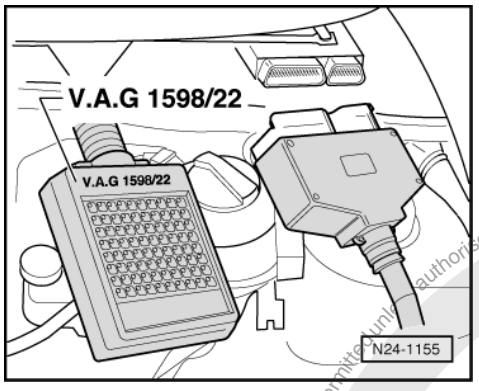

- Remove left plenum chamber cover.
- -> Connect test box V.A.G 1598/22 to control unit wiring harness.

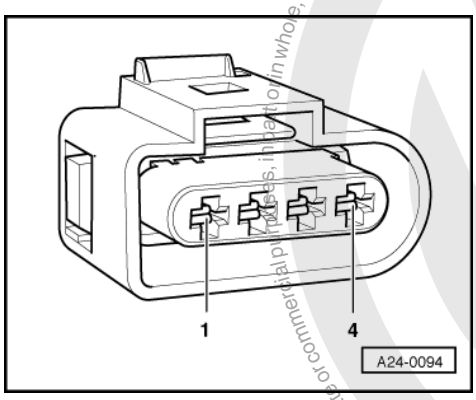

- -> Check wiring between test box and 4 pin connector (to control unit) for open circuit according to current flow diagram.
  Contact 3+socket 21
  Contact 4+socket 47
  Wire resistance: max. 1.5 ω
- Check wiring at connector contacts 3+4 for short circuit to contacts 1+2 according to current flow diagram.
  Specification: ∞ω

If no fault is detected in the wiring:

- Renew Lambda probe before catalyst (G39)
  =>Page 58 , item 20 .

Protected by copyright. Copying for private or commercial purposes, in part or in whole, is not permitted unless authorised by Volkswagen AG. Volkswagen AG does not guarantee or accept any liability with respect to the correctness of information in this document. Copyright by Volkswagen AG.
satelettronica

3.4 - Checking Lambda probe and Lambda regulation after catalyst

Only engine codes ANW, AUD

Note:

Only gold-plated contacts may be used when servicing Lambda probe connector contacts 3 and 4.

Special tools, workshop equipment, testers, measuring instruments and auxiliary items required

- Fault reader V.A.G 1551 or vehicle system tester V.A.G 1552 with cable V.A.G 1551/3A
- Test box V.A.G 1598/22
- Hand multimeter V.A.G 1526 or multimeter V.A.G 1715
- Adapter set V.A.G 1594
- Current flow diagram

Check conditions

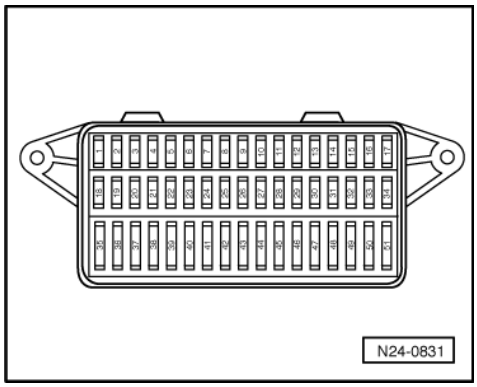

- -> Fuse No. 1 must be OK.
- The battery voltage must be at least 11.5 V.
- Exhaust system between catalyst and cylinder head must be free of leaks
- Coolant temperature must be at least 80 °C, =>display group 04, display zone 3.

Functional check

- Connect fault reader V.A.G 1551 (V.A.G 1552). Start engine and select "Address word" 01 of engine control unit. When doing this the engine must be running at idling speed.
  (Connecting fault reader and selecting engine control unit => Page 4 .)

-> Indicated on display:

```
Rapid data transfer     HELP
Select function XXX
```

- Press keys 0 and 4 for the function "Introduction of basic setting" and confirm entry with Q key.

-> Indicated on display:

```
Basic setting
Input display group number XXX
```

- Press keys 0, 3 and 7 for "Display group number 37" and confirm entry with Q key.

-> Indicated on display:
(1...4 = Display zones)

```
System in basic setting     37
     1     2     3     4
```

- Depress brake pedal.

satelettronica
Protected by copyright. Copying for private or commercial purposes, in part or in whole, is not permitted unless authorised by Volkswagen AG. Volkswagen AG does not guarantee or accept any liability with respect to the correctness of information in this document. Copyright by Volkswagen AG.

The engine speed is increased by the control unit to approx. 1100...1300 rpm.

- Run engine at increased speed until the catalyst temperature in display zone 2 increases to min. 400 °C.

Note:

This process can take a few minutes.

- Press C key.

The engine speed decreases to idling speed.

-> Indicated on display:

```
Basic setting
Input display group number XXX
```

- Press keys 0, 3 and 0 for the "Display group number 30" and confirm entry with Q key.

-> Indicated on display:
(1...2 = Display zones)

```
Read measured value block     30
     1     2
```

- Check Lambda control status after catalyst (display zone 2):
  Specification: 1 1 1
  (Significance => Page 39)

Notes:

- The first position of the 3 digit number block fluctuates between 0 and 1 (Lambda probe heating on and off).
- Depending upon the status of the Lambda control the 3 digit number block can show 0 or 1.
- The bits in display zone 1 will not be set to 1 until the catalyst temperature has exceeded 400.0 °C (=> display group 34, display zone 2).

If the specification is not obtained:

- Check Lambda probe heating after catalyst=> Page 78 .

If the specification is obtained:

- Change to display group 36 as follows:
- Press C key.

-> Indicated on display:

```
Basic setting
Input display group number XXX
```

- Press keys 0, 3 and 6 for "Display group number 36" and confirm entry with Q key.

-> Indicated on display:
(1...4 = Display zones)

```
System in basic setting 36
     1     2     3     4
```

- Depress brake pedal.

The engine speed is increased by the control unit to approx. 1100...1300 rpm.

- Check the Lambda probe voltage after catalyst in display zone 1:
  Specification: 0.000...1.000 V

Protected by copyright. Copyright by Volkswagen AG. Volkswagen AG does not guarantee or accept any liability with respect to the correctness of information in this document. Copyright by Volkswagen AG. Unauthorised use, in whole or in part, is not permitted for commercial purposes.
satelettronica

(can fluctuate slightly)

If the display in display zone 1 remains constant:
- Press ⇒key.
- Press keys 0 and 6 for the function "End output" and confirm entry with the Q key.
- Switch off ignition.
- Continue check according to following table.

Appears on display	Possible fault cause	Fault elimination
Constant 1.085 V	- Short to positive via: - Lambda probe, probe wiring, earth wiring, engine control unit	- Check Lambda probe 2 basic voltage => Page 119
Constant between 0.400...0.500 V	- Open circuit via: - Lambda probe, probe wiring, earth wiring, engine control unit	
Constant 0.000 V	- Short to earth via: - Lambda probe, probe wiring, earth wiring, engine control unit	

- Run the engine at increased speed until the display in display zone 4 jumps from "Test OFF" to"Test ON. The catalyst temperature in display zone 2 must be min. 400 °C.
- Maintain the increased engine speed until the display in display zone 4 shows the specification "B1-P2 OK.

If display zone 4 shows "B1-P2 n.OK":
- Press ⇒key.

- Press keys 0 and 6 for the function "End output" and confirm entry with the Q key.
- Check exhaust system for leaks:

=> Repair group 26; Removing and installing parts of exhaust system Removing and installing parts of exhaust system
- Carry out a test drive to remove possible residue on Lambda probe and repeat check.

Observe the valid safety precautions when carrying out a road test => Page 72
If the specifications are again not attained:
- Replace the Lambda probe after catalyst (G130) => Page 57 , item 19 .

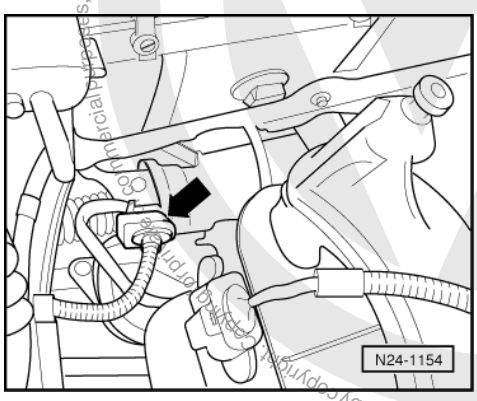

satelettronica

Checking Lambda probe 2 basic voltage

- -> Separate 4-pin connector (black) to Lambda probe after catalyst (G130) -arrow-.

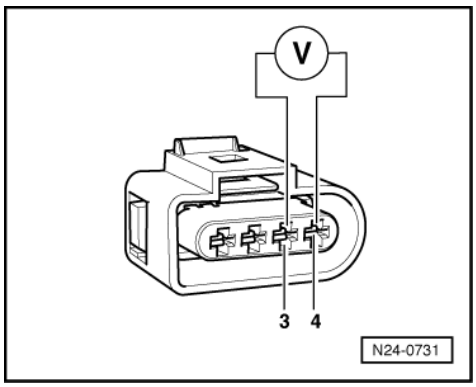

- -> Connect multimeter with aux. cables from V.A.G 1594 to measure voltage at contacts 3+4 (connector to engine control unit).
- Start engine and measure the basic voltage.
  Specification: 0.400...0.500 V
- Switch off ignition.

If the specification is not obtained:

- Check Lambda probe wiring for Lambda probe 2 => Page 119 .

If the specification is obtained:

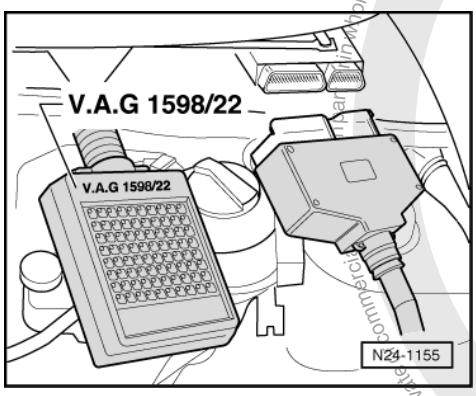

- Replace the Lambda probe after catalyst (G130) => Page 57 , item 19 .

Checking Lambda probe wiring Lambda probe 2

- Remove left plenum chamber cover.
- -> Connect test box V.A.G 1598/22 to control unit wiring harness.

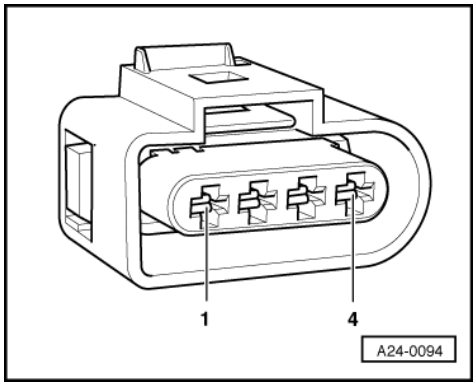

Protected by copyright. Copying for private or commercial purposes, in part or in whole, is not permitted unless authorised by Volkswagen AG. Volkswagen AG does not guarantee or accept any liability with respect to the correctness of information in this document. Copyright by Volkswagen AG.
satelettronica

- -> Check wires between test box and 4-pin connector (connector to control unit) for open circuit using current flow diagram.
  Contact 3+socket 21
  Contact 4+socket 47
  Wire resistance: max. 1.5 ω
- Check wiring at connector contacts 3+4 for short circuit to contacts 1+2 using current flow diagram.
  Specification: ∞ω

If no fault is detected in the wiring:

- Replace the Lambda probe after catalyst (G130) => Page 57 , item 19 .

3.5 - Checking ageing of Lambda probe before catalyst

Only engine codes ANW, AUD

Special tools, workshop equipment, testers, measuring instruments and auxiliary items required

- Fault reader V.A.G 1551 or vehicle system tester V.A.G 1552 with cable V.A.G 1551/3A

Test conditions

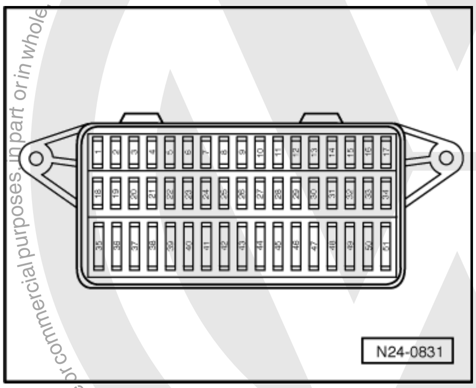

- -> Fuse No. 1 must be OK.
- Exhaust system between catalyst and cylinder head must be free of leaks
- Coolant temperature must be at least 80 °C, =>display group 04, display zone 3.

Functional check

- Connect fault reader V.A.G 1551 (V.A.G 1552). Start engine and select "Address word" 01 of engine control unit. When doing this the engine must be running at idling speed.
  (Connecting fault reader and selecting engine control unit => Page 4 .)

-> Indicated on display:

```
Rapid data transfer     HELP
Select function XXX
```

- Press keys 0 and 4 for the function "Introduction of basic setting" and confirm entry with Q key.

-> Indicated on display:

```
Basic setting
Input display group number XXX
```

- Press keys 0, 3 and 4 for "Display group number 34" and confirm entry with Q key.

-> Indicated on display:
(1...4 = Display zones)

Protected by copyright. Copying for private or commercial purposes, in part or in whole, is not permitted unless authorised by Volkswagen AG. Volkswagen AG does not guarantee or accept any liability with respect to the correctness of information in this document. Copyright by Volkswagen AG.

sateletronica

```
System in basic setting      34
     1     2     3     4
```

- Depress brake pedal.

  The engine speed is increased by the control unit to approx. 1100...1300 rpm.

- Maintain the engine speed until the display in display zone 4 jumps from "Test OFF" to "Test ON". The catalyst temperature in display zone 2 must be min. 400 °C.

Note:

This process can take a few minutes.

- Check amplitude duration in display zone 3:
  Specification: 0.7... 2.00
- Continue to maintain engine speed until the specification "B1-P1" appears in display zone 4.
- Press ⇒key.
- Press keys 0 and 6 for the function "End output" and confirm entry with the Q key.

If the specifications are not attained:

- Carry out a road test to free Lambda probe of possible residues and repeat the test.

Observe the valid safety precautions when carrying out a road test => Page 72 .

If the specifications are again not attained:

- Renew Lambda probe before catalyst (G39)
  =>Page 58 , item 20 .

Protected by copyright. Copying for private or commercial purposes, in part or in whole, is not permitted unless authorised by Volkswagen AG. Volkswagen AG does not guarantee or accept any liability with respect to the correctness of information in this document. Copyright by Volkswagen AG.

3.6 - Checking engine operating mode

Note:

Checks whether engine control unit recognises the engine operating modes idling, overrun, part throttle, enrichment, full throttle.

Special tools, workshop equipment, testers, measuring instruments and auxiliary items required

◆ Fault reader V.A.G 1551 or vehicle system tester V.A.G 1552 with cable V.A.G 1551/3A

Test conditions

• Coolant temperature must be at least 80 °C, =>display group 04, display zone 3.

Test sequence

- Connect fault reader V.A.G 1551 (V.A.G 1552). Start engine and select "Address word" 01 of engine control unit. When doing this the engine must be running at idling speed.
  (Connecting fault reader and selecting engine control unit => Page 4 .)

-> Indicated on display:

```
Rapid data transfer      HELP
Select function XXX
```

- Press keys 0 and 8 for the function "Read measured value block" and confirm entry with Q key.

satelettronica

-> Indicated on display:

```
Read measured value block
Input display group number XXX
```

- Press keys 0, 0 and 5 for "Display group number 5" and confirm entry with Q key.

-> Indicated on display:
(1...4 = Display zones)

```
Read measured value block 5
     1      2      3      4
```

- Check whether the control unit recognises the operating mode (display zone 4):

◆ Idling:

As long as the engine is running at idling speed idling must be displayed
Display: Idling

◆ Overrun mode:

- Increase engine speed to above 3000 rpm.
- Close throttle abruptly.

As long as the engine speed is above 1400 rpm overrun must be displayed
Display: Overrun

Note:

Below 1400 rpm idling speed will be recognised.

◆ Part throttle:

- Rev up evenly.

As long as the engine is being revved up evenly, part throttle must be displayed
Display: Part throt.

◆ Enrichment:

- Floor accelerator pedal (onto throttle valve stop).

Acceleration enrichment must be displayed briefly
Display: Enrichment

◆ Full throttle:

- Floor accelerator pedal (onto throttle valve stop).

Full throttle must be displayed briefly
Display: Full throttle

Note:

A test drive may have to be performed to show "Full throttle" in display.

Observe the valid safety precautions when carrying out a road test => Page 72 .

- Press ⇒key.
- Press keys 0 and 6 for the function "End output" and confirm entry with the Q key.

If the specifications are not attained:

- Interrogate fault memory, if necessary, repair any faults and then erase fault memory => Page 7 , interrogating and erasing fault memory.
- Check throttle valve control part

Protected by copyright. Copying for private or commercial purposes, in part or in whole, is not permitted unless authorised by Volkswagen AG. Volkswagen AG does not guarantee or accept any liability with respect to the correctness of information in this document. Copyright by Volkswagen AG.

satelettronica

=> Page 81 .
- Check parts of the electronic throttle control (EPC) for ease of movement:

=> Repair group 20; Electronic throttle control (EPC); Servicing parts of the electronic throttle control (EPC)
Electronic throttle control (EPC) Servicing parts of the electronic throttle control (EPC)

4 - Engine control unit

4.1 - Engine control unit

4.2 - Checking control unit voltage supply

Special tools, workshop equipment, testers, measuring instruments and auxiliary items required

- Fault reader V.A.G 1551 or vehicle system tester V.A.G 1552 with cable V.A.G 1551/3A
- Test box V.A.G 1598/22
- Hand multimeter V.A.G 1526 or multimeter V.A.G 1715
- Adapter set V.A.G 1594
- Current flow diagram

Check conditions

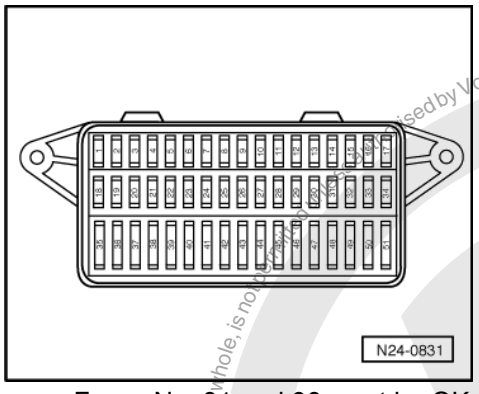

- -> Fuses No. 31 and 36 must be OK.
- Earth connection between engine (on gearbox bell housing) and body (below battery) OK.
- Earth connection in plenum chamber OK.
- The battery voltage must be at least 11.5 V.

- All electrical consumers, e.g. lights and rear window heating must be switched off.
- If the vehicle is equipped with an air conditioning system, this must be switched off.
- Alternator OK, checking:

=> Current flow diagrams, Electrical fault finding and Fitting locations

Test sequence

- Connect fault reader V.A.G 1551 (V.A.G 1552). Start engine and select "Address word" 01 of engine control unit. When doing this the engine must be running at idling speed.
  (Connecting fault reader and selecting engine control unit => Page 4 .)

-> Indicated on display:

```
Rapid data transfer      HELP
Select function XXX
```

- Press keys 0 and 8 for the function "Read measured value block" and confirm entry with Q key.

Protected by copyright. Copyright by Volkswagen AG. Volkswagen AG does not guarantee or accept any liability with respect to the correctness of information in this document. Copyright by Volkswagen AG.
satelettronica

-> Indicated on display:

```
Read measured value block
Input display group number XXX
```

- Press keys 0, 0 and 4 for "Display group number 4" and confirm entry with Q key.

-> Indicated on display:
(1...4 = Display zones)

```
Read measured value block 4
     1     2     3     4
```

- Read off figure displayed in display zone 2.
  Specification: At least 11.5 V
- Press the ⇒key.
- Press keys 0 and 6 for the "End output" function and confirm input with the Q key.
- Switch off ignition.

If the specification is not attained:

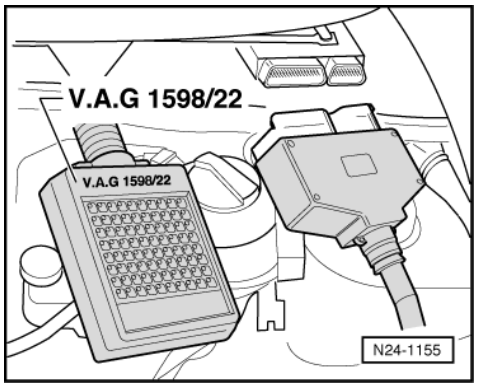

- Remove left plenum chamber cover.
- -> Connect test box V.A.G 1598/22 to control unit wiring harness.

Checking voltage supply terminal 30

- Measure voltage supply with multimeter and aux. cables from V.A.G 1594 between test box sockets 2+15 and 15+28:
  Specification: min. 11.5 V

If the specification is not attained:

- Check wiring connections to relay plate according to current flow diagram.

=> Current flow diagrams, Electrical fault finding and Fitting locations

Checking voltage supply terminal 15

- Measure voltage supply with multimeter and aux. cables from V.A.G 1594 between test box sockets 2+27 and 27+28:
- Switch on ignition.
  Specification: min. 11.5 V

If the specification is not attained:

- Check wiring connections to relay plate according to current flow diagram.

=> Current flow diagrams, Electrical fault finding and Fitting locations

Protected by copyright. Copyright by Volkswagen AG. Volkswagen AG does not guarantee or accept any liability with respect to the correctness of information in this document. Copyright by Volkswagen AG. Copying for private or commercial purposes, in part or in whole, is not permitted unless authorised by Volkswagen AG.
satelettronica

4.3 - Procedure after voltage supply open circuit

All values learnt by the engine control unit and the basic setting values as well as the readiness code will be erased if the voltage supply is interrupted. Therefore, depending upon the vehicle mileage it can lead to serious engine running problems.

Special tools, workshop equipment, testers, measuring instruments and auxiliary items required

- Fault reader V.A.G 1551 or vehicle system tester V.A.G 1552 with cable V.A.G 1551/3A

Work sequence

Perform the following operations after voltage supply open circuit:

- Switch ignition on for at least 10 seconds.
- Switch off ignition.
- Adapt the engine control unit to the throttle valve control part => Page 127
- Perform idling check
  => Page 109

Note:

During the idling check the tank venting valve (N80) and the air conditioner are switched off and the Lambda regulation learning process is initiated.

- Perform a longer test drive until the poor driving characteristics are eliminated.

  During the road test the following operating conditions must be fulfilled:
  - The coolant temperature must exceed 80 °C .
  - When the temperature is reached, the operating conditions
    Idling
    Part throttle
    Full throttle
    Overrun
    must be attained several times.
  - At full throttle the speed must exceed 3500 rpm.

4.4 - Replacing engine control unit

Special tools, workshop equipment, testers, measuring instruments and auxiliary items required

- Fault reader V.A.G 1551 with cable V.A.G 1551/3A

Removing

- First print out the control unit identification and thereby the previous control unit coding as follows:
- Connect the fault reader V.A.G 1551 (V.A.G 1552). Then switch ignition on and select engine control unit with the "Address word" 01.
  (Connecting fault reader and selecting engine control unit => Page 4 .)

-> On the display the control unit identification and coding are displayed, e.g.:

```
6K0906032M     ME 7. 5. 10     2921
□
Coding 00001     WSC 00000
```

- Print out the control unit identification by pressing the fault reader print button.
- Press the ⇒key.
- Press keys 0 and 6 for the function "End output" and confirm entry with the Q key.

- Switch off ignition.
- Remove left plenum chamber cover.

satelettronica

- Unlock engine control unit connector and pull it off.

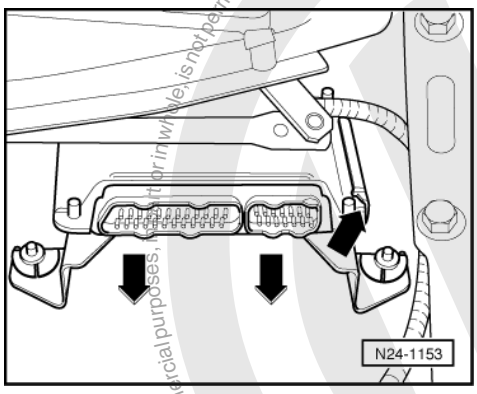

- -> Carefully lever off securing clip, using a screwdriver -right arrow-.
- Pull control unit forwards out of retaining frame -arrows-.

Installing

- Slide the new control unit into the retaining frame.
- Engage the retaining clip.
- Install control unit connector and lock.
- Adapt new control unit to throttle valve control part => Page 127
- Adapt new control unit to the electronic immobilizer => Page 129

Engine code AUD

=> Electrical system; Repair group 01; Immobilizer self-diagnosis; Adaption following renewal of engine control unit Immobilizer self-diagnosis Adaption following renewal of engine control unit

4.5 - Coding engine control unit

Notes:

- A 5-character code must always be displayed during the control unit identification.
- The control unit must be recoded if the vehicle relevant coding is not displayed or the control unit has been renewed.

Special tools, workshop equipment, testers, measuring instruments and auxiliary items required

- Fault reader V.A.G 1551 with cable V.A.G 1551/3

Work sequence

- Connect the fault reader V.A.G 1551 (V.A.G 1552). Then switch ignition on and select engine control unit with the "Address word" 01.
  (Connecting fault reader and selecting engine control unit => Page 4 .)

-> Indicated on display:

```
Rapid data transfer      HELP
Select function XXX
```

- Press keys 0 and 7 for the function "Code control unit" and confirm entry with Q key.

-> Indicated on display:

```
Coding control unit      Q
Enter code number XXXXX      (0-32000)
```

- Enter the relevant code number for this vehicle and confirm with Q key.

Protected by Volkswagen AG. Volkswagen AG does not guarantee or accept any liability with respect to the correctness of information in this document. Copyright by Volkswagen AG.
satelettronica

-> On the display the control unit identification and coding are displayed, e.g.:

```
6K0906032M     ME 7. 5. 10     2921
Coding 00001     WSC 00000
```

-> Indicated on display when a non-authorised code number has been entered.

```
Function is not recognised or cannot
be performed at the moment.
```

- Press the ⇒key.
- Press keys 0 and 6 for the "End output" function and confirm input with the Q key.
- Switch off ignition.

Note:

The code unit entered and shown on the display will not be used by the Motronic control unit until the ignition has been switched off once.

An incorrect coding leads to:

- Engine running faults (gear change jerks, load change jerks, etc.)
- Increased fuel consumption
- Increased exhaust gas emissions

- Faults stored in fault memory which are not actually present
- Functions will not be performed (Lambda regulation, activation of the activated charcoal filter system, etc.).
- On front wheel drive vehicles the traction control will not function (TC warning lamp comes on)
- Reduced gearbox life

Code table:

Code number	Vehicles with
00001	Manual gearbox
00011	Manual gearbox with ABS
00021	Manual gearbox with airbag
00031	Manual gearbox with ABS and airbag
00003	Automatic gearbox
00013	Automatic gearbox with ABS
00023	Automatic gearbox with airbag
00033	Automatic gearbox with ABS and airbag

4.6 - Adapting engine control unit to throttle valve control part

The adaption teaches the engine control unit the various positions of the throttle unit when the ignition is switched on and the engine is not running. These positions are stored in the control unit. The feedback of the throttle valve position is via both angle senders for throttle valve drive.

Adapting sequence must be performed if:

- The voltage supply is interrupted
- The throttle valve control unit is removed and installed
- The throttle valve control unit is renewed
- If when installing another engine another throttle valve control unit is installed
- The engine control unit is renewed.

Protected by copyright. Copying for private or commercial purposes, in part or in whole, is not permitted unless authorised by Volkswagen AG. Volkswagen AG does not guarantee or accept any liability with respect to the correctness of information in this document. Copyright by Volkswagen AG.
satelettronica

Special tools, workshop equipment, testers, measuring instruments and auxiliary items required

- Fault reader V.A.G 1551 or vehicle system tester V.A.G 1552 with cable V.A.G 1551/3A

Check conditions

- Ignition on, engine not running
- No faults must be stored in fault memory => Page 7 , interrogating and erasing fault memory.
- The battery voltage must be at least 11.5 V.
- If the vehicle is equipped with an air conditioning system, this must be switched off.
- All electrical consumers, e.g. lights and rear window heating must be switched off.
- The throttle valve must be at idling speed position (The accelerator must not be operated during the test).
- Coolant temperature must be 5...105 °C =>display group 04, display zone 3.

Work sequence

- Connect the fault reader V.A.G 1551 (V.A.G 1552). Then switch ignition on and select engine control unit with the "Address word" 01.
  (Connecting fault reader and selecting engine control unit => Page 4 .)

-> Indicated on display:

```
Rapid data transfer      HELP
Select function XXX
```

- Press keys 0 and 4 for the function "Initiating basic settings" and confirm entry with Q key.

-> Indicated on display:

```
Basic setting
Input display group number XXX
```

- Press keys 0, 6 and 0 for the "Display group number 60" and confirm entry with Q key.

-> Indicated on display:
(1...4 = display zones)

```
Basic setting      60
     xxx %      xxx %      x      ADP. runs
```

After pressing the Q key the throttle valve positioner is switched so that it is not supplied with voltage at start of test.

- Learning step 1: The engine control unit checks if all test conditions are fulfilled.

- Learning step 2: The throttle valve part is switched to no voltage (emergency operation position). The angle sender values of the emergency operation position are stored in engine control unit.
- Learning step 3: The throttle valve is set to a value above the emergency operation point.
- Learning step 4: The final stage of the throttle valve positioner is switched off. Now the mechanical spring must set the throttle valve to the previously learnt emergency operation position within a certain time (spring closing test).
- Learning step 5: The throttle valve is closed by the throttle valve positioner (lower mechanical stop).
- Learning step 6: The throttle valve angle value on lower mechanical stop will be stored in control unit. Then the lower electrical stop will be defined (calculated) and stored in the control unit.
- Learning step 7: The final stage is switched off at the lower mechanical stop. Now the mechanical spring must set the throttle valve in the emergency operation position (spring opening test).

- Learning step 8: The sender angle values are checked.
- Learning step 9: Adaption ends.

-> Indicated on display:
(1...4 = display zones)

```
Basic setting      60
     xxx %      xxx %      9      ADP. OK.
```

Adapting has been performed successfully.

satelettronica

- Terminate engine basic setting at earliest after 30 seconds by pressing the⇒ key.
- Press keys 0 and 6 for the function "End output" and confirm entry with the Q key.

To store the values:

- Switch off ignition.

Note:

If the basic setting of the control unit is interrupted, the cause could be one of the following:

- The test conditions were not fulfilled.
- Throttle valve control unit or wiring is defective. Check => Page 81 .

After an interruption a fault is stored in fault memory. When next switching on ignition the basic setting is automatically performed again.

4.7 - Adapting engine control unit to electronic immobilizer

Engine code AUD

=> Electrical system; Repair group 01; Immobilizer self-diagnosis; Adaption following renewal of engine control unit Immobilizer self-diagnosis Adaption following renewal of engine control unit

Special tools, workshop equipment, testers, measuring instruments and auxiliary items required

- VAS 5051 Vehicle Diagnosis, Testing and Information System
- Diagnosis cable VAS 5051/1 or VAS 5051/3

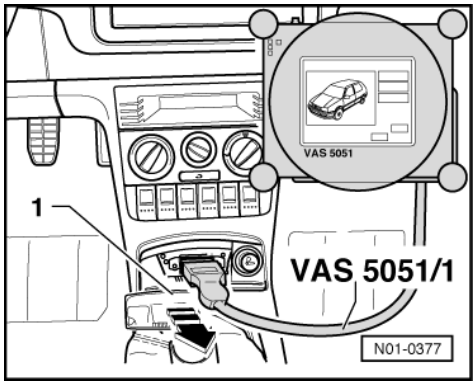

Conditions

- Authorized vehicle key required.

Work sequence

- -> Pull out ashtray -1-.
- Fit connector from diagnosis cable VAS 5051/1 or VAS 5051/3 to diagnosis connection.
- Switch on ignition.
- Operate fault reader or vehicle system tester taking into account the information on the display:
- Press button on display for "Vehicle self-diagnosis".
- Press keys 2 and 5 for address word "Immobilizer" and confirm entry with Q key.

-> Indicated on display:

```
6H0953257 IMMO VWZ3Z0V6474044 V64
Coding 00000     WSC XXXXX
```


satelettronica

- Press the ⇒key.

-> Indicated on display:

```
Rapid data transfer      HELP
Select function XXX
```

- Press keys 1 and 0 for function "Adaption" and confirm entry with Q key.

-> Indicated on display:

```
Adaption
Feed in channel number XX
```

- Press key 0 twice for "Channel number 0" and confirm entry with Q key.

-> Indicated on display:

```
Adaption     Q
Erase learnt values?
```

- Confirm input with Q key.

-> Indicated on display:

```
Adaption
Learnt values have been erased
```

- Conclude adaption by pressing ⇒ key.
- Press keys 0 and 6 for the function "End output" and confirm entry with the Q key.

-> Indicated on display:

```
Rapid data transfer      HELP
Enter address word XX
```

- Switch off ignition.

Note:

The identity of the engine control unit is read into the immobilizer control unit when next switching the ignition on.

5 - Checking additional signals

5.1 - Checking additional signals

5.2 - Checking speed signal

Special tools, workshop equipment, testers, measuring instruments and auxiliary items required

- Fault reader V.A.G 1551 or vehicle system tester V.A.G 1552 with cable V.A.G 1551/3A
- Test box V.A.G 1598/22
- Hand multimeter V.A.G 1526 or multimeter V.A.G 1715
- Adapter set V.A.G 1594
- Current flow diagram

Check conditions

- The battery voltage must be at least 11.5 V.

Protected by copyright. Copying for private or commercial purposes, part or in whole, is not permitted unless authorised by Volkswagen AG. Volkswagen AG does not guarantee or accept any liability with respect to the correctness of information in this document. Copyright by Volkswagen AG.
satelettronica

- Speedometer must be OK., checking speedometer:

=> Electrical system; Repair group 90

- No faults must be stored in fault memory => Page 7 , interrogating and erasing fault memory.

Test sequence

Note:

To check the speed signal the vehicle must be driven. To do this a second person is necessary.

Warning! Secure fault reader to rear seat and operate from this position.

Observe the valid safety precautions when carrying out a road test => Page 72 .

- Connect fault reader V.A.G 1551 (V.A.G 1552). Start engine and select "Address word" 01 of engine control unit. When doing this the engine must be running at idling speed.
  (Connecting fault reader and selecting engine control unit => Page 4 .)

-> Indicated on display:

```
Rapid data transfer      HELP
Select function XXX
```

- Press keys 0 and 8 for the function "Read measured value block" and confirm entry with Q key.

-> Indicated on display:

```
Read measured value block
Input display group number XXX
```

- Press keys 0, 0 and 5 for "Display group number 5" and confirm entry with Q key.

-> Indicated on display:
(1...4 = Display zones)

```
Read measured value block 5
     1     2     3     4
```

- Carry out test drive with a 2nd person to observe display.
- Observe figure displayed in display zone 3:
  Specification: approx. driven speed
- Drive slower. The displayed value must decrease.
- Press the ⇒key.
- Press keys 0 and 6 for the "End output" function and confirm input with the Q key.
- Switch off ignition.

If no speed is indicated or the display values reduce when driving slowly:

- Remove left plenum chamber cover.

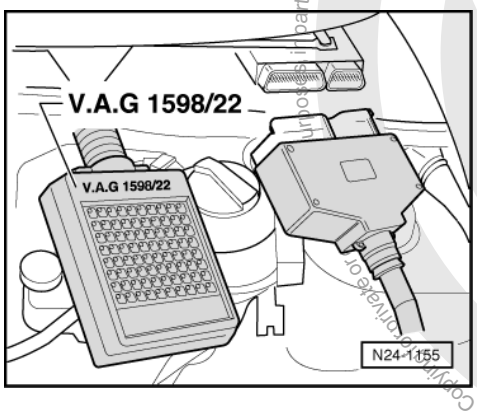

satelettronica
Protected by copyright. Copyright by Volkswagen AG. Unauthorized use, copying or publication by third parties, in whole or in part, is not permitted. Uploaded by Volkswagen AG. Volkswagen AG does not guarantee or accept any liability with respect to the correctness of information in this document.

- -> Connect test box V.A.G 1598/22 to control unit wiring harness.
- Connect multimeter to measure voltage between test box sockets 27 (terminal 15) + 5 (speed signal).
- Switch on ignition.
- Lift vehicle at front left.
- Rotate front wheel and observe voltage display.
  Specification: between 0 and at least 4 Volt fluctuating

Note:

If necessary, hold the front right wheel to prevent it from turning.

If the display does not fluctuate:

- Check wiring to speedometer/speedometer sender:

=> Current flow diagrams, Electrical fault finding and Fitting locations binder

5.3 - Checking signal from/to air conditioning system

Special tools, workshop equipment, testers, measuring instruments and auxiliary items required

- Fault reader V.A.G 1551 or vehicle system tester V.A.G 1552 with cable V.A.G 1551/3A
- Test box V.A.G 1598/22
- Hand multimeter V.A.G 1526 or multimeter V.A.G 1715
- Adapter set V.A.G 1594
- Current flow diagram

Test conditions

- All electrical consumers, e.g. lights and rear window heating must be switched off.
- Air conditioner functioning OK.
- Air conditioner must be switched off
- Vehicle at room temperature (warmer than + 15 °C).
- No faults must be stored in fault memory => Page 7 , interrogating and erasing fault memory.

Test sequence

- Connect fault reader V.A.G 1551 (V.A.G 1552). Start engine and select "Address word" 01 of engine control unit. When doing this the engine must be running at idling speed.
  (Connecting fault reader and selecting engine control unit => Page 4 .)

-> Indicated on display:

```
Rapid data transfer      HELP
Select function XXX
```

- Press keys 0 and 8 for the function "Read measured value block" and confirm entry with Q key.

-> Indicated on display:

```
Read measured value block
Input display group number XXX
```

- Press keys 0, 5 and 0 for "Display group number 50" and confirm entry with Q key.

-> Indicated on display:
(1...4 = Display zones)

```
Read measured value block 50
     1     2     3     4
```

- Observe display in display zone 3. It must show
  A/C-Low.
- Observe display in display zone 4. It must show

Protected by copyright. Copyright by Volkswagen AG. Volkswagen AG does not guarantee or accept any liability with respect to the correctness of information in this document. Copyright by Volkswagen AG. Volkswagen AG. Any use or commercial exploitation, in part or in whole, is not permitted unless authorised by Volkswagen AG.
satelettronica

Compr. OFF.

- Switch on air conditioning system.
- Select lowest temperature and highest blower speed.

The display in display zone 3 must change to
A/C-High.
The display in display zone 4 must change to
Compr. ON.

- Floor accelerator pedal quickly and then release (brief burst of throttle).

The display in display zone 4 must change from
Compr.ON
to
Compr. OFF
for a few seconds (compressor switch-off when vehicle is accelerating).

- Press the ⇒key.
- Press keys 0 and 6 for the "End output" function and confirm input with the Q key.
- Switch off ignition.

If the display does not change:

- Remove left plenum chamber cover.

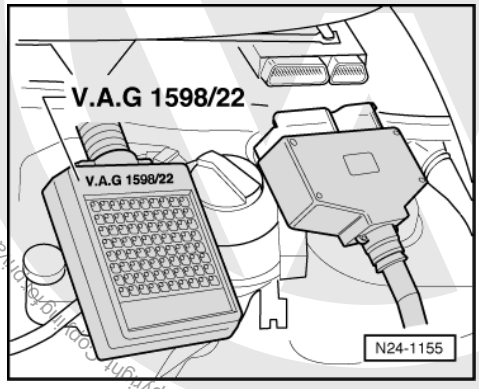

- -> Connect test box V.A.G 1598/22 to control unit wiring harness.
- Check wiring for open circuit between test box sockets 17 + 42 and air conditioner using current flow diagram.
Wire resistance: max. 1.5 ω

If no fault can be found in the wiring:

- Interrogate fault memory, if necessary, repair any faults and then erase fault memory => Page 7 , interrogating and erasing fault memory.
- Check function of air conditioner control unit.

5.4 - Checking signal from brake light switch and brake pedal switch

Special tools, workshop equipment, testers, measuring instruments and auxiliary items required

- Hand multimeter V.A.G 1526 or multimeter V.A.G 1715
- Adapter set V.A.G 1594
- Test box V.A.G 1598/22
- Current flow diagram

satelettronica

Check conditions

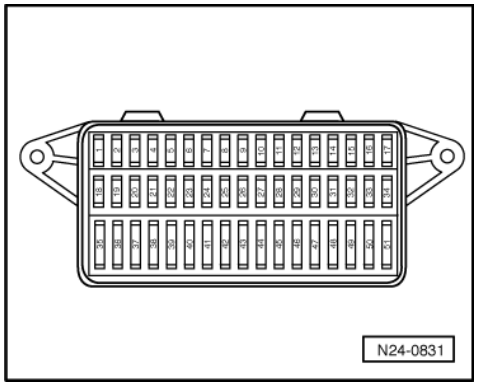

- -> Fuses No. 15 and 24 must be OK.
- The battery voltage must be at least 11.5 V.

Test sequence

Note:

The brake pedal switch (F47) and brake light switch (F) are two separate components.

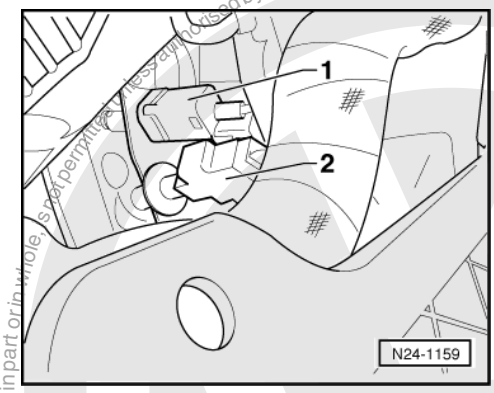

- -> Pull the connector off brake light switch (item 2) and brake pedal switch (item 1).
- Connect the multimeter to measure resistance between contacts 1 and 2 of brake light switch (item 2).
  Specification: ∞ ω (no continuity)
- Depress brake pedal.
  Specification: approx. 0 ω
- Connect the multimeter to measure resistance between contacts 1 and 2 of brake pedal switch (item 1).
  Specification: approx. 0 ω
- Depress the brake pedal.
  Specification: ∞ ω (no continuity)

If the specifications are not attained:

- Replace the brake light switch or brake pedal switch.

If the specifications are obtained:

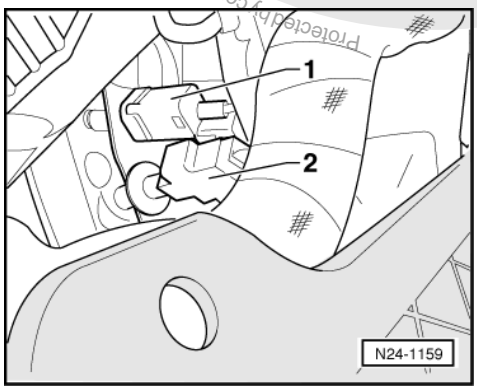

Protected by copyright. Copying for private or commercial purposes, in part or in whole, is not permitted unless authorised by Volkswagen AG. Volkswagen AG does not guarantee or accept any liability with respect to the correctness of information in this document. Copyright by Volkswagen AG.
satelettronica

- -> Connect multimeter to measure voltage between contact 1 of brake light switch -2- and earth.
  Specification: at least 11.5 V
- Switch ignition on.
- Connect multimeter to measure voltage between contact 1 of brake pedal switch -1- and earth.
  Specification: at least 11.5 V

If the specifications are not obtained:

- Check wiring between connector contact 1 and fuse box using current flow diagram.

=> Current flow diagrams, Electrical fault finding and Fitting locations binder

If the specification is obtained:

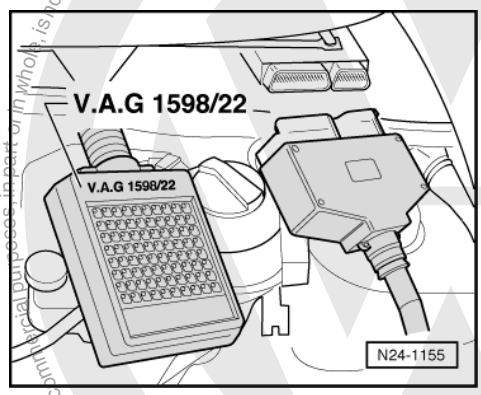

- Remove left plenum chamber cover.
- -> Connect test box V.A.G 1598/22 to control unit wiring harness.
- Check wiring for open circuit between test box and connectors using current flow diagram.
  Contact 2+socket 51 brake pedal switch
  Contact 2+socket 23 brake light switch
  Wire resistance: Max. 1.5 ω
- Additionally check wires for short to one another.
- Additionally check the wiring for short to battery positive or earth.

5.5 - Checking rpm signal

Note:

The engine rpm signal output is on contact 41 of engine control unit. Amongst other things the signal is necessary for the rev. counter in dash panel insert.

Special tools, workshop equipment, testers, measuring instruments and auxiliary items required

- Test box V.A.G 1598/22
- Adapter set V.A.G 1594
- Hand multimeter V.A.G 1526 or multimeter V.A.G 1715
- Current flow diagram

Test conditions

- No faults must be stored in fault memory => Page 7 , interrogating and erasing fault memory.

Test sequence

- Remove left plenum chamber cover.

Protected by copyright. Copyright by Volkswagen AG. Volkswagen AG does not guarantee or accept any liability with respect to the correctness of information in this document. Copyright by Volkswagen AG. Volkswagen AG. Volkswagen AG. is not permitted unless authorised by Volkswagen AG. Volkswagen AG does not guarantee or accept any liability with respect to the correctness of information in this document. Copyright by Volkswagen AG.
satelettronica

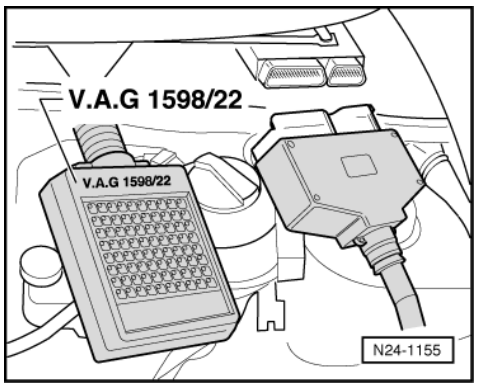

- -> Connect test box V.A.G 1598/22 to control unit wiring harness.
- Check wiring from test box contact 41 to dash panel insert for open circuit using current flow diagram:

=> Current flow diagrams, Electrical fault finding and Fitting locations binder

5.6 - Checking matching resistor of data bus

Function

The engine control unit communicates with other data bus-compatible control units.

The control units are connected via a twisted pair of data bus wires ("high" and "low") and exchange information (messages). Information missing from the data bus will be recognised as a fault by both the engine control unit and other data bus control units.

The data bus requires a matching resistor to function fault free. This central matching resistor is located in the engine control unit.

Test conditions

- A data bus fault has been recognised by the self-diagnosis.

Special tools, workshop equipment, testers, measuring instruments and auxiliary items required

- Test box V.A.G 1598/22
- Hand multimeter V.A.G 1526 or multimeter V.A.G 1715
- Adapter set V.A.G 1594
- Current flow diagram

Test sequence

- Switch off ignition.
- Unlock the engine control unit connector and pull it off.
- Connect test box V.A.G 1598/22 to engine control unit.
- Check centralized matching resistor in engine control unit.
- To do this perform a resistance measurement between the test box
  Sockets 31 + 32
  Specification: 60...72 ω

If the resistance measurement is outside the specified range:

- Renew engine control unit => Page 125 .

If the resistance value is within the specified range:

- Repair the fault:

Protected by copyright. Copyright by Volkswagen AG. Volkswagen AG does not guarantee or accept any liability in respect to the correctness of information in this document. Copyright by Volkswagen AG. Unauthorised by Volkswagen AG. Volkswagen AG does not guarantee or accept any liability in respect to the correctness of information in this document. Copyright by Volkswagen AG.
satelettronica

=> Current flow diagrams, Electrical fault finding and Fitting locations binder

Protected by copyright. Copying for private or commercial purposes, in part or in whole, is not permitted unless authorised by Volkswagen AG. Volkswagen AG does not guarantee or accept any liability with respect to the correctness of information in this document. Copyright by Volkswagen AG.
satelettronica

28 - Ignition system

1 - Servicing ignition system

1.1 - Servicing ignition system

1.2 - General notes on ignition system

- Only the components which specifically relate to the ignition system are dealt with here. For the other components of the injection and ignition system => Repair group 24.
- Disconnecting and connecting the battery must only be done with the ignition switched off, otherwise the engine control unit could be damaged.
- The engine control unit is equipped with self diagnosis.
- Components marked with * are checked via the self diagnosis
  => Page 7 , interrogating and erasing fault memory.
- For trouble-free operation of the electrical components a voltage of at least 11.5 V is necessary.
- Before carrying out repairs and for fault finding, interrogate fault memory => Page 7 , interrogating and erasing fault memory
- During some checks it is possible that the control unit will recognise and store a fault. Therefore after completing all checks and repairs the fault memory must be interrogated and if necessary erased.
  => Page 7 , interrogating and erasing fault memory

- If the engine starts, runs for a short period and then stops, after fault finding, repairs or component tests, then the fault may lie with the immobilizer which is blocking the engine control unit. The fault memory must be interrogated and if necessary the control unit matched => Page 129 .

Safety precautions => Page 142

Test data, spark plugs => Page 142

satelettronica

1.3 - Removing and installing parts of the ignition system

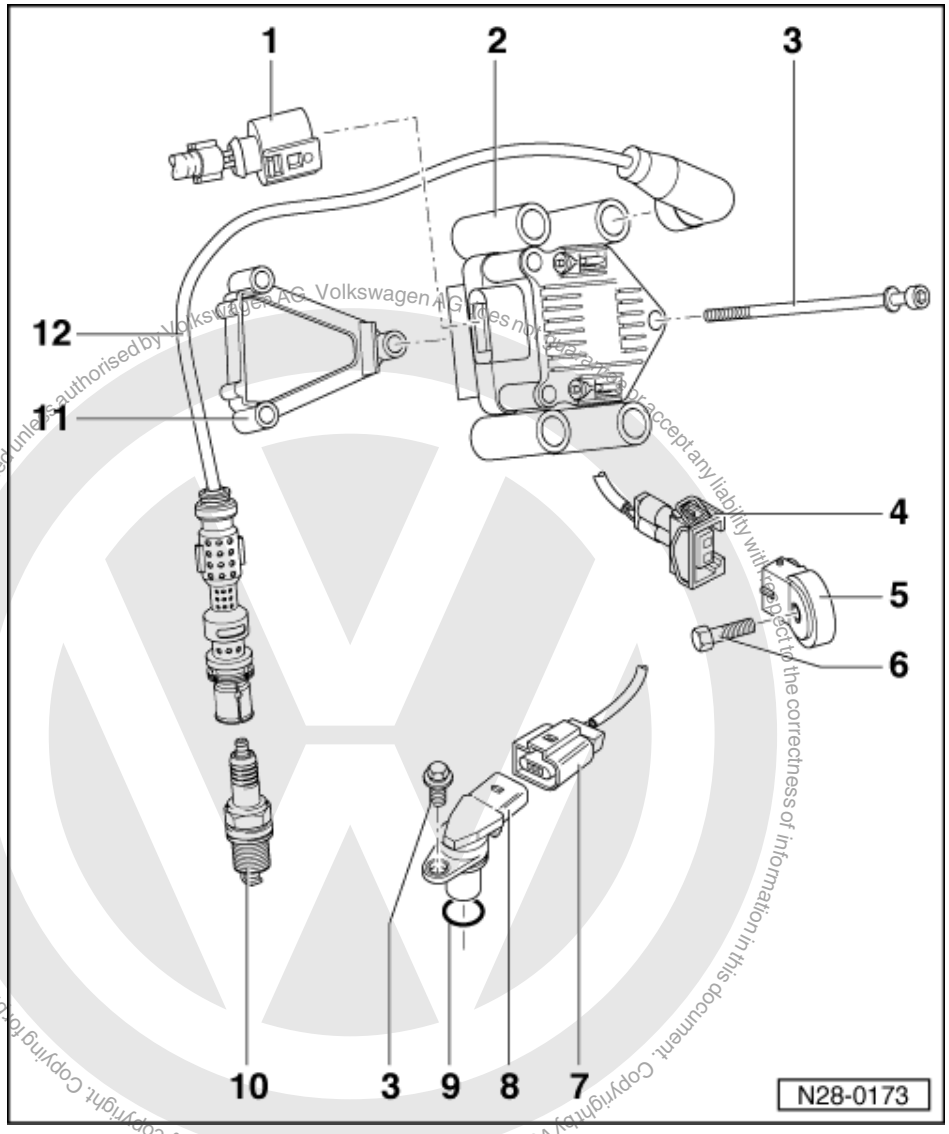

Protected by copyright. Copying for private or commercial purposes, in part or in whole, is not permitted unless authorised by Volkswagen AG. Volkswagen AG does not guarantee or accept any liability with respect to the correctness of information in this document. Copyright by Volkswagen AG.

Note:

Motronic control unit (J220) with connectors*

=> Page 49 , item 10 .

1 Connector
- Black, 4 pin
- For ignition transformer (N152)

2 Ignition transformer (N152)*
- Fitting location => Page 48 , engine compartment overview
- Checking => Page 144
- With marking for ignition cables:
  A = Cylinder 1
  B = Cylinder 3
  C = Cylinder 2
  D = Cylinder 4

3 10 Nm

satelettronica

Protected by copyright. Copyright by Volkswagen AG. Volkswagen AG does not guarantee or accept any liability with respect to the correctness of information in this document. Copyright by Volkswagen AG. Not for private or commercial purposes, in part or in whole, is not permitted unless authorised by Volkswagen AG.

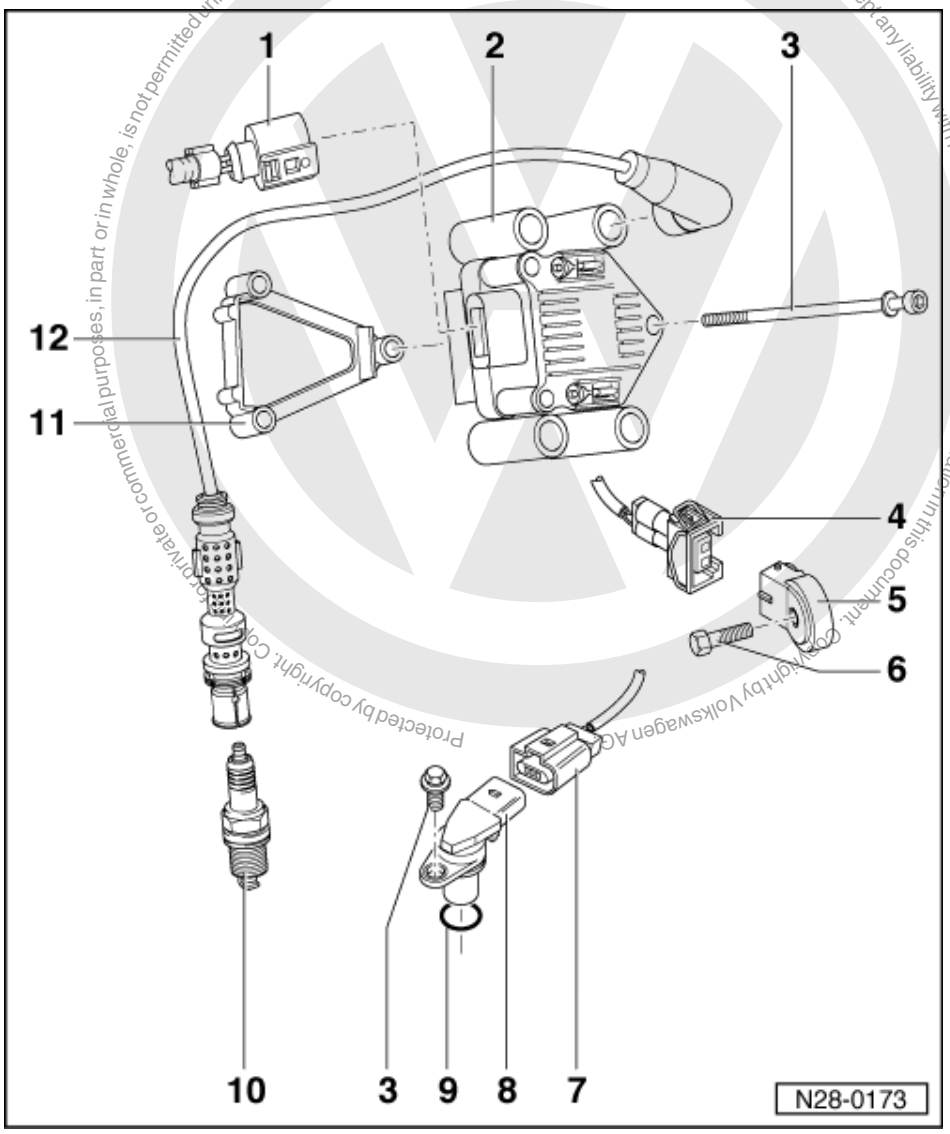

4 Connector
- Black, 2-pin
- For knock sensor 1 (G61)
- Sensor and connector contacts are gold-plated

5 Knock sensor 1 (G61)*
- Fitting location => Page 48 , engine compartment overview
- Checking => Page 148
- Sensor and connector contacts are gold-plated

6 20 Nm
- Tightening torque influences the function of the knock sensor

7 Connector
- Black, 3-pin
- Hall sender (G40)

satelettronica

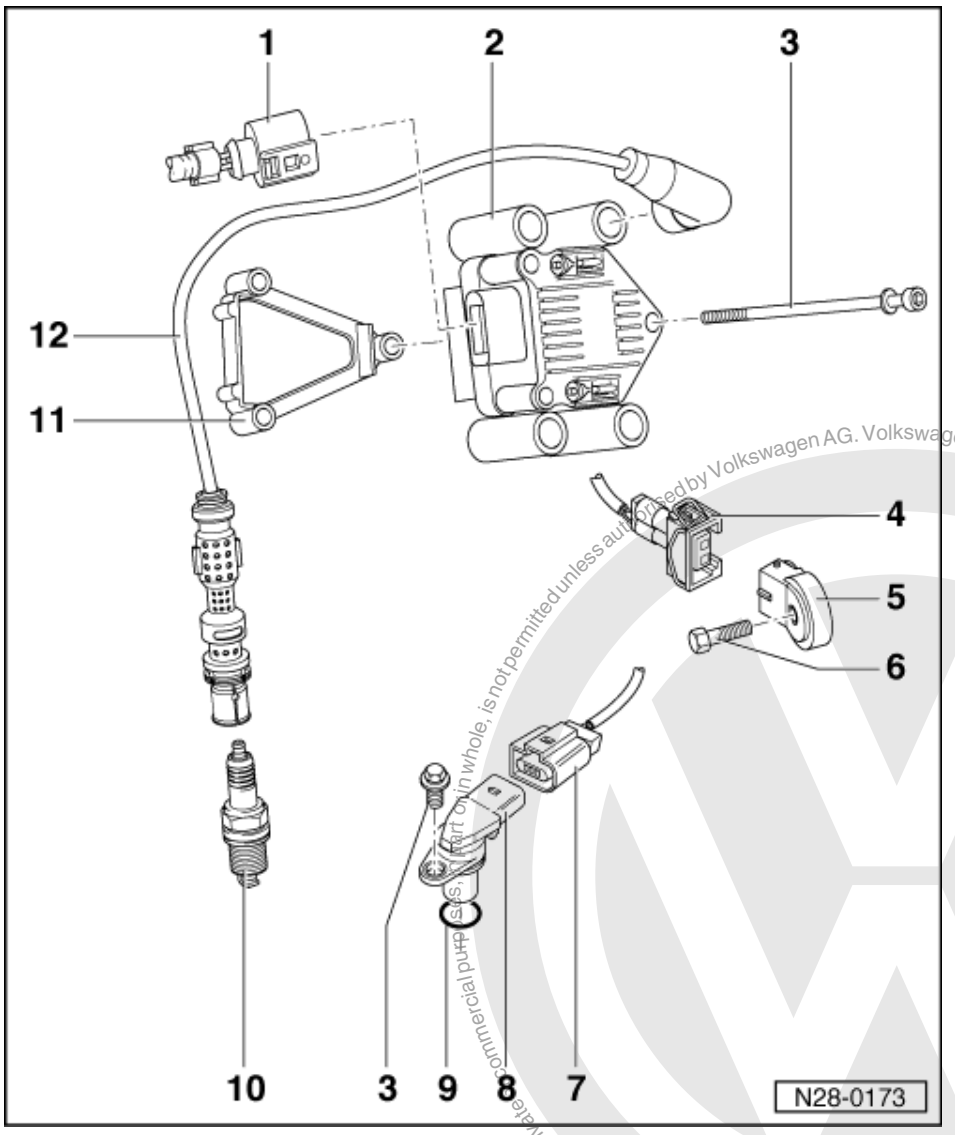

8 Hall sender (G40)*
- Fitting location => Page 48 , engine compartment overview
- Checking => Page 143

9 O-ring
- Renew if damaged

10 Spark plug, 30 Nm
- Remove and install with spark plug spanner 3122B
- Type and electrode gap
  => Page 142 , test data, spark plugs

11 Bracket
- For ignition transformer (N152)

12 H.T. cable
- With suppression connector and spark plug connector
- Resistance 4.8...7.2 kω

Protected by copyright. Copyright for private and commercial purposes, in part or in whole, is not permitted unless authorised by Volkswagen AG. Volkswagen AG does not guarantee or accept any liability with respect to the correctness of information in this document. Copyright by Volkswagen AG.
satelettronica

1.4 - Safety precautions

To prevent injuries to persons and/or damage to the fuel injection and ignition system, the following must be noted:

- Do not touch or disconnect ignition wiring when the engine is running or being turned at starter speed.
- The ignition must be switched off before connecting or disconnecting injection or ignition system wiring or tester cables.

Observe following if test and measuring instruments are required during a test drive:

- Test and measuring instruments must be secured to rear seat and operated by a 2nd person from this location.

  If test and measuring instruments are operated from front passenger's seat and the vehicle is involved in an accident, there is a possibility that the person sitting in this seat may receive serious injuries when the airbag is triggered.

- If the engine is to be turned at starter speed, without starting:

- Remove air cleaner => Page 71 , Fig. 3 .

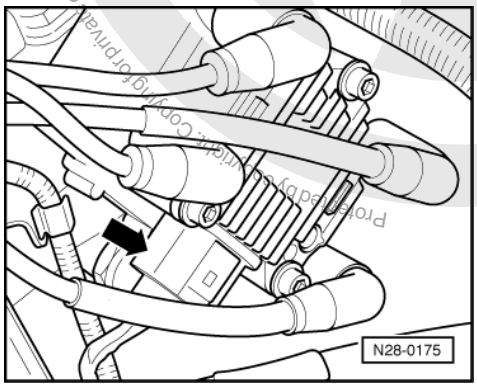

- -> Pull 4 pin connector off ignition transformer -arrow-.

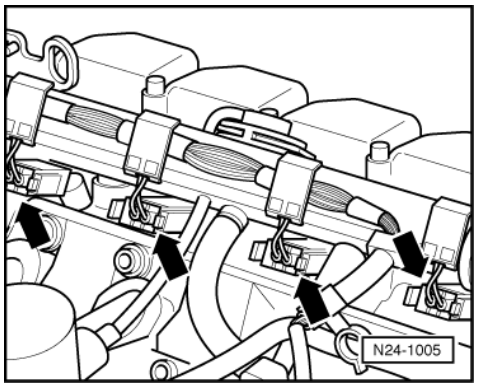

- -> Pull plug -arrows- off all injectors.

1.5 - Test data, spark plugs

Engine code	AKK	ANW, AUD
Firing order	1-3-4-2	1-3-4-2
Spark plugs1), 2)		

satelettronica

Engine code	AKK	ANW, AUD
VW/Audi Manufacturer's designation	101 000 062 AB NGK PZFR 5 D-11	101 000 062 AB NGK PZFR 5 D-11
Electrode gap	max. 1.0... 1.1 mm	max. 1.0... 1.1 mm
Tightening torque	30 Nm	30 Nm

1) The up-to-date figures and the spark plug change intervals:

=> Exhaust emissions test binder

2) Remove and install spark plugs with 3122B

1.6 - Checking Hall sender

Special tools, workshop equipment, testers, measuring instruments and auxiliary items required

- Test box V.A.G 1598/22
- Hand multimeter V.A.G 1526 or multimeter V.A.G 1715
- Adapter set V.A.G 1594
- Current flow diagram

Check conditions

- The battery voltage must be at least 11.5 V.
- If the vehicle is equipped with an air conditioning system, this must be switched off.
- All electrical consumers, e.g. lights and rear window heating must be switched off.
- Hall sender screwed on tight

Test sequence

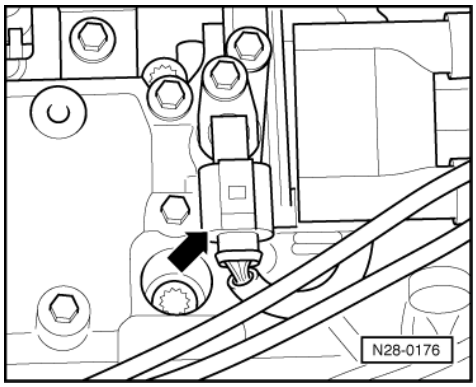

- -> Pull 3-pin connector off Hall sender -arrow-.

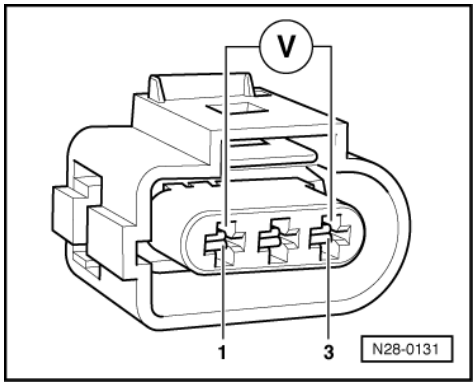

Protected by copyright. Copyright by Volkswagen AG. Volkswagen AG does not guarantee or accept any liability with respect to the correctness of information in this document. Copyright by Volkswagen AG. Reproduction, in part or in whole, for private or commercial purposes, is not authorised by Volkswagen AG.
satelettronica

- -> Connect multimeter to measure voltage with adapter cables from V.A.G 1594 to contacts 1 (positive) and 3 (earth) on the Hall sender connector.
- Switch on ignition.
  Specification: min. 4.5 V
- Switch off ignition.

If no voltage is present:

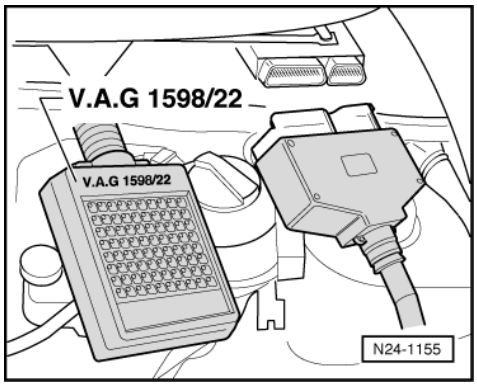

- Remove left plenum chamber cover.
- -> Connect test box V.A.G 1598/22 to control unit wiring harness.

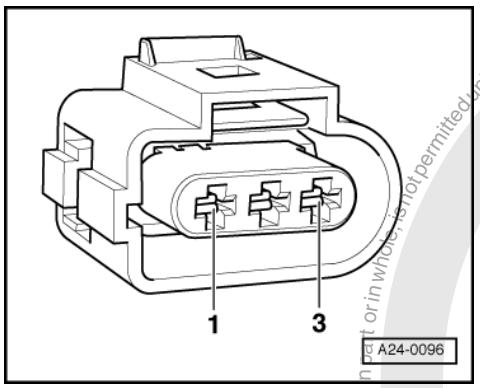

- -> Check wiring between test box and 3-pin connector (connector to control unit) for open circuit using current flow diagram.
  Contact 1+socket 62
  Contact 2+socket 60
  Contact 3+socket 54
  Wire resistance: max. 1.5 ω
- Additionally check wires for short to one another.
  Specification: ∞ω

If no wiring fault is detected and voltage was present between contacts 1+3:

- Renew Hall sender (G40)
  => Page 141 , item 8 .

If no wiring fault is detected and no voltage was present between contacts 1+3:

- Replace engine control unit
  => Page 125 .

1.7 - Checking ignition transformer

Special tools, workshop equipment, testers, measuring instruments and auxiliary items required

- Test box V.A.G 1598/22
- Hand multimeter V.A.G 1526 or multimeter V.A.G 1715

Protected by copyright. Copying for private or commercial purposes, in part or in whole, is not permitted unless authorised by Volkswagen AG. Volkswagen AG does not guarantee or accept any liability with respect to the correctness of information in this document. Copyright by Volkswagen AG.
satelettronica

- Adapter set V.A.G 1594
- Diode test lamp V.A.G 1527
- Current flow diagram

Check conditions

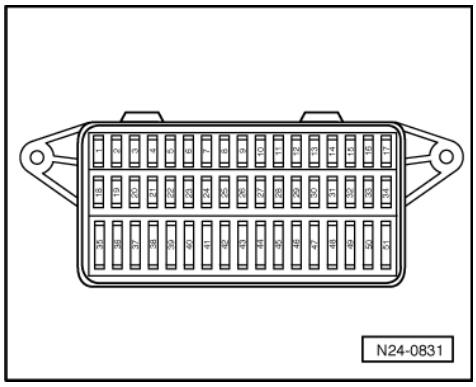

- -> Fuse No. 34 must be OK.
- The battery voltage must be at least 11.5 V.
- If the vehicle is equipped with an air conditioning system, this must be switched off.
- All electrical consumers, e.g. lights and rear window heating must be switched off.
- Hall sender must be OK, checking =>Page 143 .
- Engine speed sender must be OK, checking Page 94 .

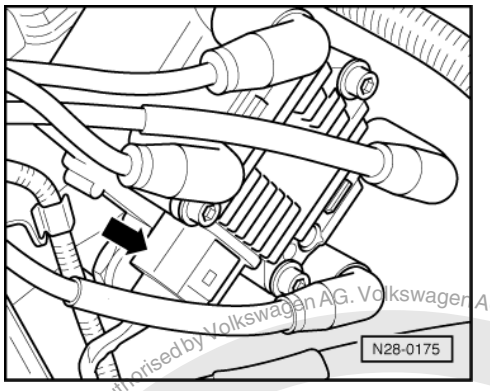

Test sequence

- Remove air cleaner => Page 71 , Fig. 3 .
- -> Pull 4 pin connector off ignition transformer -arrow-.

Checking voltage supply

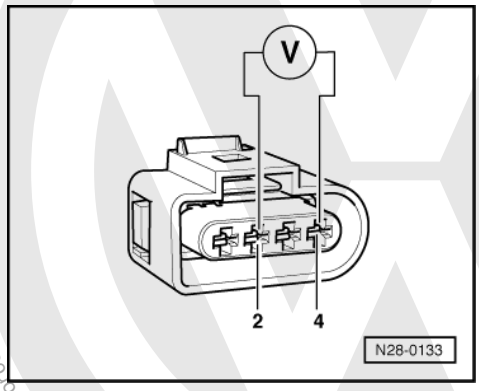

- -> Using multimeter and adapter cables from V.A.G 1594 measure the supply voltage between contacts 2 +4 of disconnected connector.
- Switch on ignition.

Protected by copyright. Copyright by Volkswagen AG.
Commercial purposes, in part or in whole, is not permitted unless authorised by Volkswagen AG. Volkswagen AG does not guarantee or accept any liability with respect to the correctness of information in this document.
satelettronica

Specification: min. 11.5 V
- Switch off ignition.

If no voltage is present:

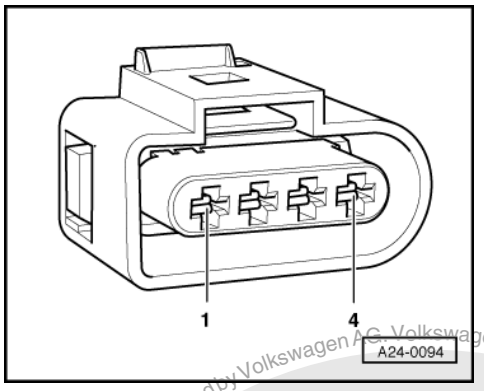

- -> Check wire between 4 pin connector contact 2 and relay plate for open circuit according to current flow diagram.
  Wire resistance: max. 1.5 ω
- Check wire between 4 pin connector contact 4 and earth for open circuit according to current flow diagram.
  Wire resistance: max. 1.5 ω

Checking activation

Warning! During the following test do not touch the terminals of the ignition transformer or test cables.

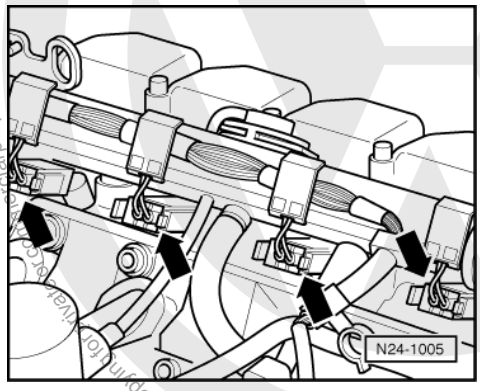

- -> Pull plug -arrows- off all injectors.

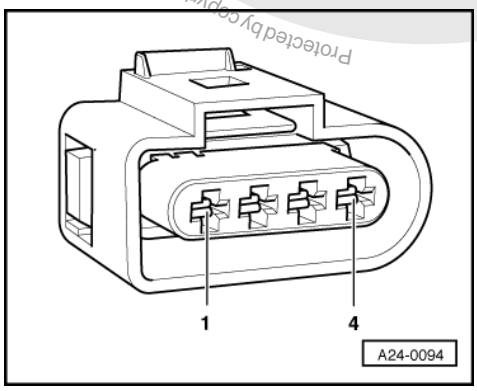

- -> Connect diode test lamp V.A.G 1527 with adapter cables from V.A.G 1594 to
  contacts 1 + 4 (ignition output 1),
  contacts 3 + 4 (ignition output 2)

Protected by copyright. Copyright by Volkswagen AG. Volkswagen AG does not guarantee or accept any liability with respect to the correctness of information in this document. Copyright by Volkswagen AG. Any use for commercial purposes, in part or in whole, is not permitted without the authorisation by Volkswagen AG.
satelettronica

of disconnected connector.

- Operate starter and check the ignition signal from engine control unit.
  The LED must flicker
- Switch off ignition.

If the LED flickers and there is voltage between contacts 2 + 4:

- Renew ignition transformer (N152)
  => Page 139 , item 2.

The LED does not flicker:

- Check wiring => Page 147

Checking wiring

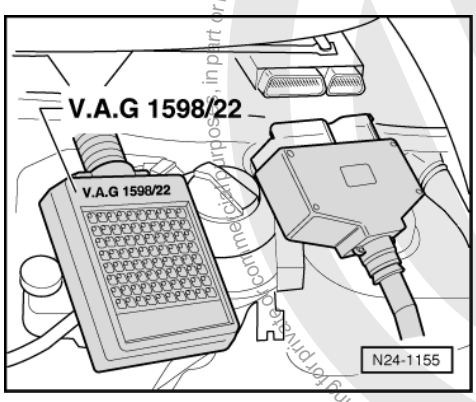

- Remove left plenum chamber cover.
- -> Connect test box V.A.G 1598/22 to control unit wiring harness.

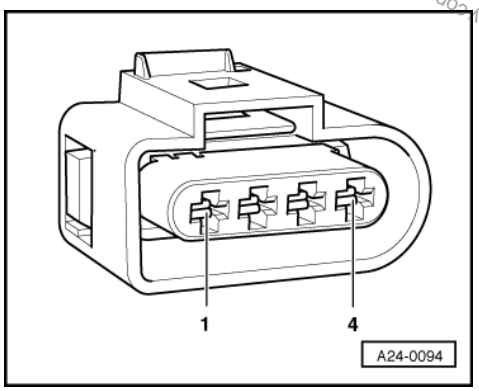

- -> Check wires between test box and 4-pin connector (connector to control unit) for open circuit using current flow diagram..
  Contact 1+socket 57
  Contact 3+socket 71
  Wire resistance: max. 1.5 ω
- Additionally check wires for short to one another.
  Specification: ∞ω

If no wiring fault is detected and voltage was present between contacts 2+4:

- Replace engine control unit
  => Page 125 .

Protected by copyright. Copyright by Volkswagen AG. Volkswagen AG does not guarantee or accept any liability with respect to the correctness of information in this document. Copyright by Volkswagen AG. Not permitted unless authorised by Volkswagen AG. Not for private or commercial purposes, in part or in whole.
satelettronica

Checking secondary resistance

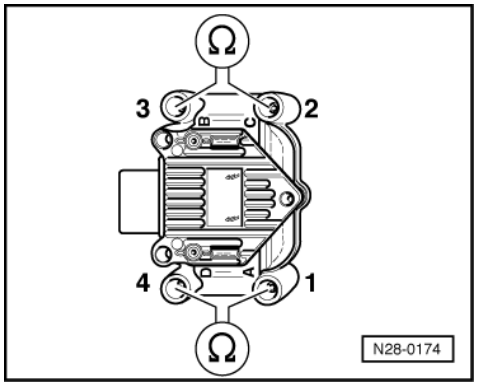

- -> Check the secondary winding on terminal 4 between
  Cyl. 1+Cyl. 4,
  Cyl. 2+Cyl. 3.
  Specification: 4.0... 6.0 kω (at 20 °C)

If the specifications are not attained:

- Renew ignition transformer (N152)
  => Page 139 , item 2 .

1.8 - Checking knock sensor

Notes:

- It is extremely important to keep to the tightening torque of 20 Nm to ensure the knock sensors perform perfectly.
- Only gold-plated contacts may be used when servicing the knock sensor connector contacts.

Special tools, workshop equipment, testers, measuring instruments and auxiliary items required

- Test box V.A.G 1598/22
- Hand multimeter V.A.G 1526 or multimeter V.A.G 1715
- Adapter set V.A.G 1594
- Current flow diagram

Test conditions

- Knock sensor fault recognised by self-diagnosis =>Page 7 , interrogating and erasing fault memory.

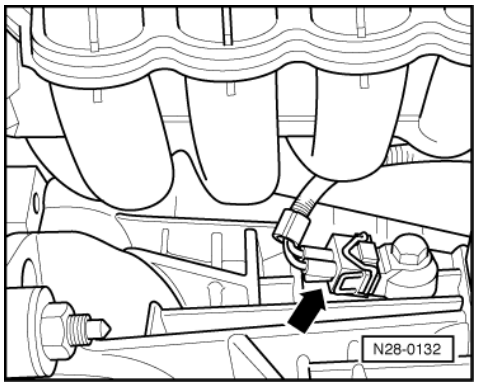

Protected by copyright. Copying for private or commercial purposes, in part or in whole, is not permitted unless authorised by Volkswagen AG. Volkswagen AG does not guarantee or accept any liability with respect to the correctness of information in this document. Copyright by Volkswagen AG.
satelettronica

Test sequence

- -> Pull 2 pin connector off knock sensor -arrow-.

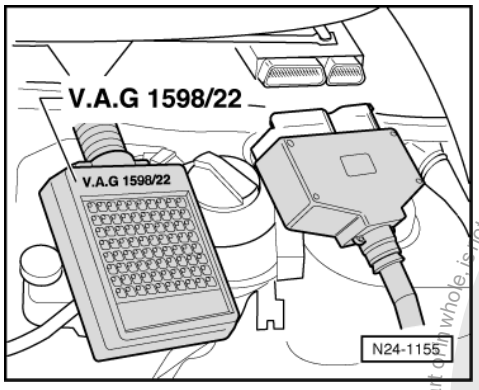

- Remove left plenum chamber cover.
- -> Connect test box V.A.G 1598/22 to control unit wiring harness.

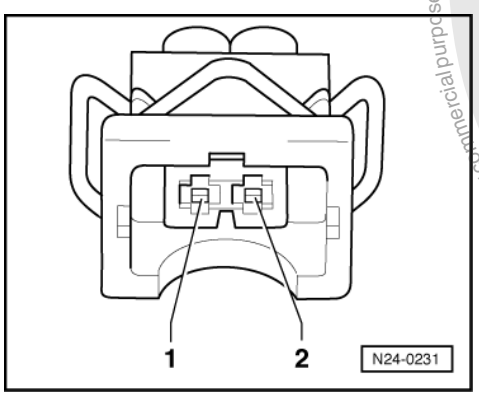

- -> Check wires between test box and 2-pin connector (connector to control unit) for open circuit using current flow diagram.
  Contact 1+socket 77
  Contact 2+socket 63
  Wire resistance: max. 1.5 ω
- Additionally check wires for short to one another.
  Specification: ∞ω

If no fault is detected in the wiring:

- Loosen knock sensor and tighten again to 20 Nm.
- Carry out test drive.

Observe the valid safety precautions when carrying out a test drive => Page 142 .

During the road test the following operating conditions must be fulfilled:
- The coolant temperature must exceed 80 °C .

- When the temperature is reached, the operating conditions
  Idling
  Part throttle
  Full throttle
  Overrun
  must be attained several times.
- At full throttle the speed must exceed 3500 rpm.

Again interrogate the control unit fault memory.

If the fault is still present:

- Replace knock sensor (G61) =>Page 140 , item 5 .

Protected by copyright. Copying for private or commercial purposes, in part or in whole, is not permitted unless authorised by Volkswagen AG. Volkswagen AG does not guarantee or accept any liability with respect to the correctness of information in this document. Copyright by Volkswagen AG.
satelettronica

1.9 - Check misfiring recognition

Only engines which conform to D4 standard (engine code ANW)

Special tools, workshop equipment, testers, measuring instruments and auxiliary items required

- Fault reader V.A.G 1551 or vehicle system tester V.A.G 1552 with cable V.A.G 1551/3A

Test sequence

- Connect fault reader V.A.G 1551 (V.A.G 1552). Start engine and select "Address word" 01 of engine control unit. When doing this the engine must be running at idling speed.
  (Connecting fault reader and selecting engine control unit => Page 4 .)

-> Indicated on display:

```
Rapid data transfer      HELP
Select function XXX
```

- Press keys 0 and 8 for the function "Read measured value block" and confirm entry with Q key.

-> Indicated on display:

```
Read measured value block
Input display group number XXX
```

- Press keys 0, 1 and 4 for "Display group number 14" and confirm entry with Q key.

-> Indicated on display:
(1...4 = Display zones)

```
Read measured value block 14
     1     2     3     4
```

- Check the misfire recognition status in display zone 4.
  Specification: "activated"
- Check total misfires in display zone 3.
  Specification: 0

If the specifications are obtained:

- Press ⇒key.
- Press keys 0 and 6 for the "End output" function and confirm input with the Q key.
- Switch off ignition.

If the specifications are not attained:

- Change to display group 15 as follows:
  V.A.G 1551: Press key 3
  V.A.G 1552: Press key ↑

-> Indicated on display:
(1...4 = Display zones)

```
Read measured value block 15
     1     2     3     4
```

- Check the misfire recognition status in display zone 4.
  Specification: "activated"

- Check misfiring of Cyl. 1...Cyl. 3 in display zones 1...3.
  Specification: 0

If the specifications are not attained:

- Press ⇒key.
- Press keys 0 and 6 for the "End output" function and confirm input with the Q key.

Protected by copyright. Copying for private or commercial purposes, in part or in whole, is not permitted unless authorised by Volkswagen AG. Volkswagen AG does not guarantee or accept any liability with respect to the correctness of information in this document. Copyright by Volkswagen AG.
satelettronica

- Switch off ignition.
- =>Page 36 , Evaluating display group 15 and display group 16.

If the specifications are obtained:

- Change to display group 16 as follows:
  V.A.G 1551: Press key 3
  V.A.G 1552: Press key ↑

-> Indicated on display:
(1 and 4 = Display zones)

```
Read measured value block 16
     1                 4
```

- Check misfire recognition status in display zone 4.
  Specification: "activated"

- Check misfiring of Cyl. 4 in display zone 1
  Specification: 0
- Press ⇒key.
- Press keys 0 and 6 for the "End output" function and confirm input with the Q key.
- Switch off ignition.

If the specification is not attained:

- =>Page 36 , Evaluating display group 15 and display group 16.

Protected by copyright. Copying for private or commercial purposes, in part or in whole, is not permitted unless authorised by Volkswagen AG. Volkswagen AG does not guarantee or accept any liability with respect to the correctness of information in this document. Copyright by Volkswagen AG.
satelettronica